VELAN CAST STEEL

Gate, Globe and Check Valves

API 600 & 603
ASME Class 150–1500
2–60" (50–1500 mm)

CAST STEEL VALVES MANUFACTURING PROGRAM

API 600 CAST STEEL GATE, GLOBE & CHECK VALVES

VALVE TYPE & CLASS		SIZE (in, mm)																				
		2 50	2½ 65	3 80	4 100	6 150	8 200	10 250	12 300	14 350	16 400	18 450	20 500	24 600	28 700	30 750	32 800	36 900	40 1000	42 1100	48 1200	60 1500
GATE	150	✓	✓	✓	✓	✓	✓	✓	✓	✓	✓	✓	✓	✓	✓	✓	✓	✓	✓	✓	✓	✓
	300	✓	✓	✓	✓	✓	✓	✓	✓	✓	✓	✓	✓	✓		✓		✓				
	600	✓	✓	✓	✓	✓	✓	✓	✓	✓	✓	✓	✓	✓		✓		✓				
	900	✓	✓	✓	✓	✓	✓	✓														
	1500	✓	✓	✓	✓	✓	✓	✓														
GLOBE	150	✓	✓	✓	✓	✓	✓	✓	✓	✓	✓	✓										
	300	✓	✓	✓	✓	✓	✓	✓	✓	✓	✓	✓										
	600	✓	✓	✓	✓	✓	✓	✓														
CHECK	150	✓	✓	✓	✓	✓	✓	✓	✓	✓	✓	✓	✓	✓	✓	✓		✓				
	300	✓	✓	✓	✓	✓	✓	✓	✓	✓	✓	✓	✓	✓	✓							
	600	✓	✓	✓	✓	✓	✓	✓	✓	✓	✓	✓	✓	✓								
	900	✓	✓	✓	✓	✓	✓															
	1500	✓	✓	✓	✓	✓	✓															

API 603 CAST STAINLESS STEEL GATE, GLOBE & CHECK VALVES

VALVE TYPE & CLASS		SIZE (in, mm)																
		½ (1) 15	¾ (1) 20	1 (1) 25	1½ (1) 40	2 50	2½ 65	3 80	4 100	6 150	8 200	10 250	12 300	14 350	16 400	18 450	20 500	24 600
GATE	150	✓	✓	✓	✓	✓	✓	✓	✓	✓	✓	✓	✓	✓	✓	✓	✓	✓
	300	✓	✓	✓	✓	✓	✓	✓	✓	✓	✓	✓	✓	✓				
GLOBE	150	✓	✓	✓	✓	✓	✓	✓	✓	✓								
	300	✓	✓	✓	✓	✓	✓	✓	✓	✓								
CHECK	150	✓	✓	✓	✓	✓	✓	✓	✓	✓	✓	✓	✓					
	300	✓	✓	✓	✓	✓	✓	✓	✓	✓	✓	✓	✓					

(1) Refer to API 603 catalogue.

API 600 BONNET GASKET MATERIALS

VALVE TYPE	MATERIAL
GATE	Class 150: corrugated steel/graphite (2–2½" (50–65 mm) spiral wound)
	Class 300–1500: spiral wound stainless steel and graphite
GLOBE	Spiral wound stainless steel and graphite
CHECK	Spiral wound stainless steel and graphite

API 603 BONNET GASKET MATERIALS

VALVE TYPE	MATERIAL	
	Trim SX	Trim GX
GATE, GLOBE and CHECK	PTFE with stainless wire mesh	graphite with stainless steel foil

OPTIONAL BODY MATERIALS

ASTM SPEC. GRADE	NOMINAL DESIGNATION	MIN. TEMP		MAX. TEMP.		VELAN CODE
		°F	°C	°F	°C	
A216-WCB	Carbon steel	-20	-29	800	427	02
A217-WC6	1¼ CR–½ Mo	-20	-29	1100*	593	05
A217-WC9	2¼ CR–1 Mo	-20	-29	1100*	593	06
A217-C5	5 CR–½ Mo	-20	-29	1200*	649	04
A217-C12	9 CR–1 Mo	-20	-29	1200*	649	09
A352-LCB	Carbon steel	-50	-46	650	343	25
A352-LCC	Carbon steel	-50	-46	700	371	31
A352-LC2	2½ Ni	-100	-73	650	343	26
A351-CF8M	18 CR-9 Ni-2 Mo	-425	-254	1500*	816*	13
A351-CF3M	18 CR-9 Ni-2 Mo	-425	-254	850	454	14

*Note: *Flanged end ratings terminate at 1000°F (538°C) for Class 150.*

DESIGN OF STEM SEALS

Velan now offers standard cast steel bolted bonnet gate and globe valves qualification tested for compliance with EPA fugitive emissions regulations

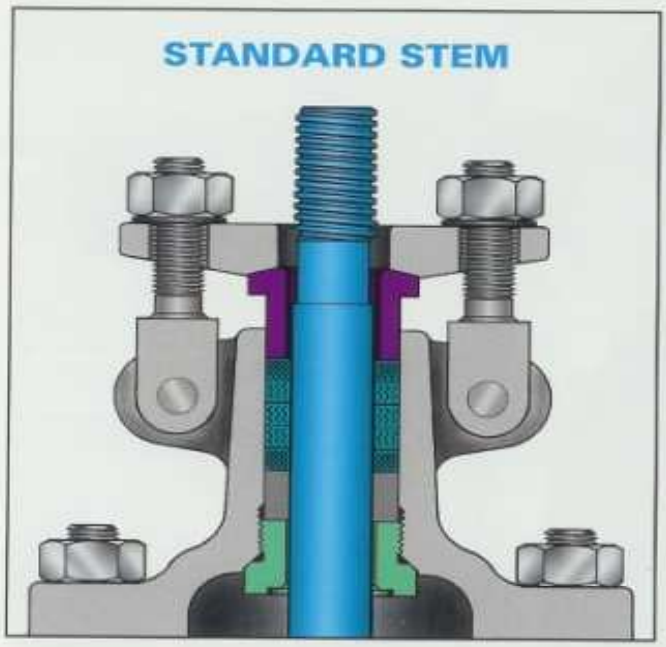

The Velan stem seal evolved from these test findings:

- **Ensures leakage of less than 100 ppm** as demonstrated through extensive laboratory testing.
- **Large loads**. Sealing is achieved when compression load is high and packing forms a mass of low porosity and permeability (4,000 psi for graphite).
- **Small clearances between vital parts.**
- **Precision stem and packing chambers.** Straightness, roundness and fine finish of stem and packing chamber wall are essential.
- **Short and narrow packing chambers improve sealing.** Maximum six rings in a single set chamber, and, wherever possible, only ¼" wide.
- **Stem and packing chamber walls.** Close roundness, straightness and superior surface finish of 16 RMS or better for the stem and 63 RMS for the packing chamber.

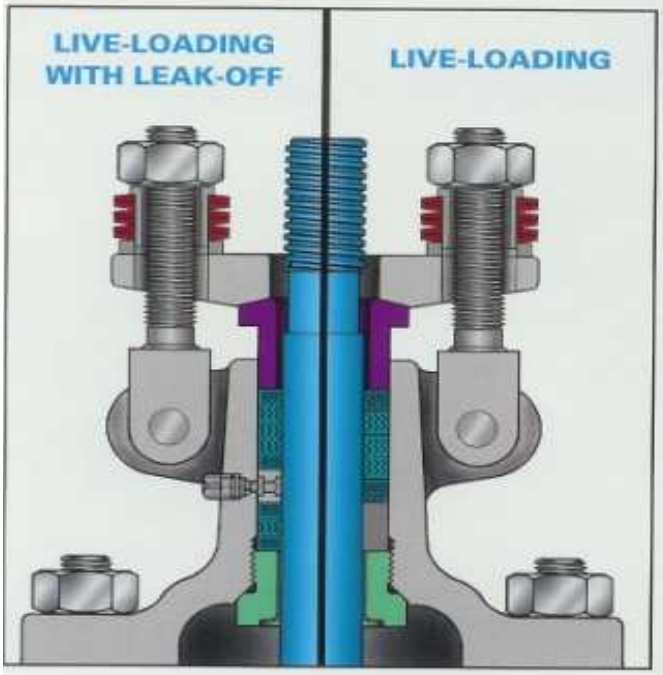

LIVE-LOADING OPTIONS

- **Live-loading**. Two sets of Belleville springs maintain a permanent packing stress of 3500–4000 psi. Live-loading extends low emission service life especially in service with large pressure/temperature transients or frequent cycling.
- **Leak-off**. For critical service a lantern ring and double packing can be provided with a leak-off connection. The leak-off is provided to allow collection of leakage from the lower packing set.
- **Rings individually compressed in packing chamber** to 3500 –4000 psi for graphite and PTFE to ensure equal stress distribution and effectiveness of all rings.
- Velan has extensive experience in valve live-loading. The original live-loading concept was developed by Velan in 1972 in a research project for AECL to eliminate leakage in Nuclear service. Velan has been supplying live loaded valves for Nuclear and non-Nuclear service for more than 20 years.

API 600 CAST STEEL VALVES
TYPICAL TEST REPORT

TEST CONDITIONS

Test Medium:	Propane at 115 psi, ambient temperature
Instrument:	Organic vapor analyzer OVA-108, range 1–10,000 ppm
Valve Type:	Gate, Class 150, API 600
Sizes:	3", 6", 12" (80, 150, 300 mm)
Packing:	Graphite
Gasket:	Corrugated steel with graphite filler
Trim:	Wedge: 13 CR Seat: Stellite
Quantity:	3" (80 mm) – one valve 6" (150 mm) – four valves 12" (300 mm) – one valve

TEST COMPARISON TO API 598 TEST

- API 598 test standard requires no visible external leakage (gasket, packing chamber and casting). The organic vapor analyzer measures leakage in parts per million (ppm). "Visible leakage" in API 598 is one drop of liquid per minute which we estimate is equivalent to about 2,400 ppm of gas. The API 598 test does not invoke cycling while we have cycled valves between 100 and 5000 cycles in our research testing.
- Critical factors in low emission service life include severity of pressure/temperature transients, number of cycles and cleanliness. During extensive cycling tests it was found that after leak paths developed, leakage could be reduced or eliminated by retightening gland bolts. For example a 150 ppm leak that developed after 350 cycles could be reduced to zero after retightening gland bolts.

6" GATE VALVE
5000 cycle test

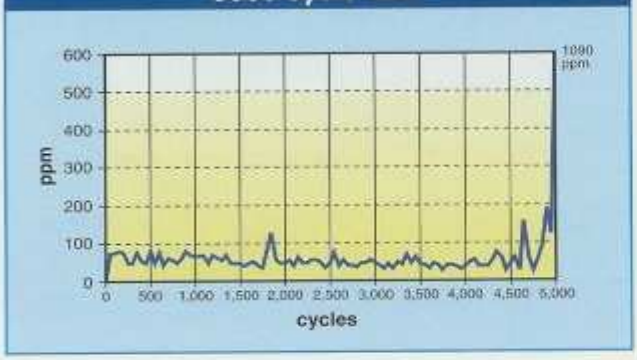

3", 6" AND 12" GATE VALVES
100 cycle test

TESTING GASKET PERFORMANCE

Upper right: *50 cycles with steam at 400°F (204°C)*
Leakage: zero ppm.

Upper left:
3000 cycles with propane at 125 psi
Leakage: zero ppm.

Left:
Thermal shock with water at 60°F (15°C)
Leakage: zero ppm.

Valve type:	**Class 150 gate valve**
Size:	**6" (150 mm)**
Gasket:	**Corrugated steel with graphite filler**
Instrument:	**OVA-108 vapor analyzer Range: 1–10,000 ppm**

BODY-BONNET GASKET DESIGN
GATE VALVES WITH OVAL FLANGES

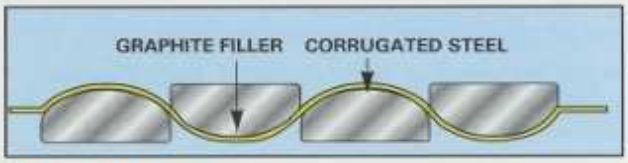

Standard corrugated steel gaskets without graphite as specified in API 600 were found to be an unacceptable choice for low emmission service, even under ideal laboratory test conditions, and regardless of flange finish and gasket load. After testing several alternative gaskets, we selected the best performing gasket in our tests - a corrugated steel gasket with graphite filled channels.

TYPICAL TEST RESULT:
3700 cycles with zero ppm for 6" Class 150.

DESIGN FEATURES:

- **Ensures leakage of no more than 20 ppm** as demonstrated through extensive laboratory testing.
- **Requires no retorquing** after long cycling.
- **Effective under wide fluctuations** of temperature and pressure.
- **Insensitive to flange finish.**
- **Steel walls of graphite channels** provide additional protection from oxidation, corrosion and blow-out.
- **Seal offers the advantage of flexible graphite** (0–14pH, -328°F to +2000°F).
- **Lower bolt torques.**
- **Modern torquing methods.**

At time of printing Velan is performing tests on a graphite gasket recommended by a major oil company. If the tests are satisfactory then Velan may standardize on the new graphite gasket reinforced with stainless steel. For additional information contact Velan.

API 600 CAST STEEL VALVES WITH ROUND BODY-BONNET FLANGES

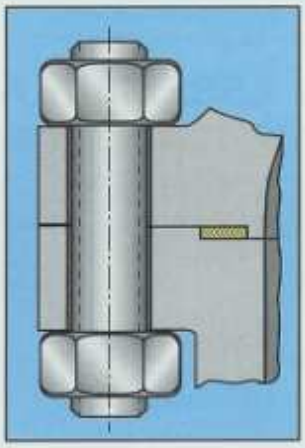

FULLY-ENCASED SPIRAL WOUND
316 or 347 SS/GRAPHITE BODY-BONNET GASKET

Gate	Class 150: 2–2½" (50–65 mm) Class 300–1500: 2–36" (50–900 mm)
Globe	Class 150–600: 2–16" (50–400 mm)
Check	Class 150–1500: 2–36" (50–900 mm)

DESIGN FEATURES:

- **Ensures leakage of no more than 20 ppm** as demonstrated through extensive laboratory testing.
- **Full enclosure** to allow gasket to retain positive radial support during loading.
- **Accurate control of compression** through close tolerance of gasket groove and allowance for radial expansion.
- **No radial machine marks.**
- **Minimum of three inner wraps** to prevent buckling.
- **Minimum of three tack welds.**
- **Minimum of three filler wraps.**
- **Close tolerance** (± 0.005" or 0.13 mm) for gasket thickness.
- **Regular testing of gasket resiliency** and inspection at Receiving due to sensitivity to inconsistent quality.
- **Modern torquing methods.**

TYPICAL TEST RESULT:
3100 cycles with zero ppm for 10" Class 300.

TECHNOLOGY OF SEAT-DISC TIGHTNESS

The initial seat tightness of valves which can be proven by hydro-testing has little effect on extended long-term tightness.

SEAT-DISC CONTACT MECHANICS

- When magnified, even a ground, lapped surface appears irregular and rough.
- The rate of leakage is a function of the smoothness and finish of the surfaces.
- The seat-disc (wedge) contacts are between the peaks.
- For absolutely leak-tight joints, the peaks must be deformed with torque until a large portion of mating surfaces is in microscopic contact.
- The compression stress is approximately 3 times the yield (for 70,000 psi–210,000 psi).
- Sufficient contact pressure generated by the torque is essential. A small increase in contact pressure produces a rapid decrease in leakage.
- The valve seat should be either very narrow or very wide.

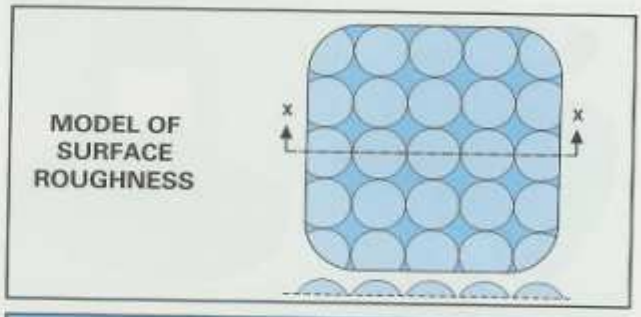

Globe Valves	Conical seat-line contact
Gate Valves and Swing Check Valves	Large, flat-faced seats

VELAN API 600 GATE VALVE SEAT TIGHTNESS

GATE VALVE SEAT TIGHTNESS

- Welded-in Stellite 6 faced seats and a flexible wedge in 13 CR, SS 316, Monel or hardfaced with Stellite 6.
- Seating faces ground and lapped to 2 RMS .

Factory Acceptance Standard for Gate Valve Seat Leakage

Size in	Velan Standard (VEL-NDT-571)	Seat Leakage Rate [1] (API 598–October 1996)	
		Low Pressure Test	High Pressure Test
2	0	0	0
2½–6	0	24	12
8–12	0	40	20
14+	28	56	28

(1) Leakage rates are in bubbles per minute for low pressure test and drops per minute for high pressure test.

EIGHT IMPORTANT STEPS IN ASSEMBLY AND TESTING
Make the Difference in Seat Tightness and Performance

1 Automatic seal welding of Stellite 6 hardfaced seats.

2 Air-under-water test of the seat's welds.

3 Relapping of seating faces after seal welding.

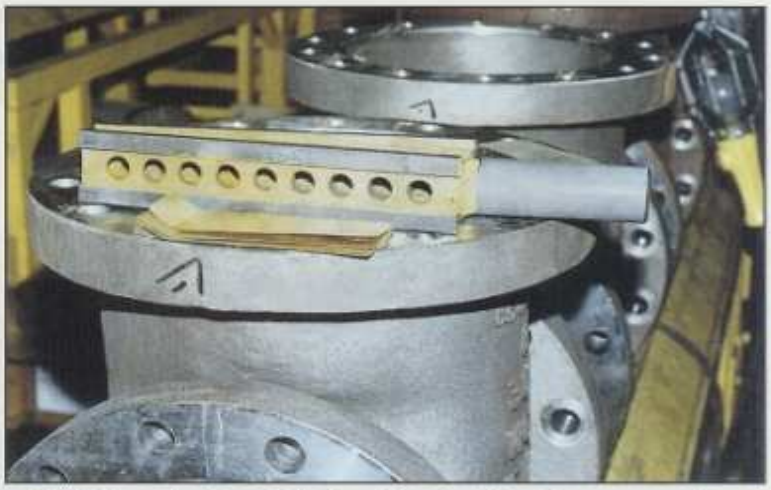

4 Determination of final seat/seat angle with gauge and shims to determine ideal wedge angle (6–60°).

5 Precision grinding of individually fit wedge seating surfaces.

6 Lapping of wedge seating surfaces.

7 Assigning the ideally fitted wedge, ground and lapped, to proper valve body.

8 After assembly, pressure testing of shell, seats, packing and backseat to API 598.

VELAN API 600 GATE VALVES
FLEXIBLE WEDGE VERSUS SOLID WEDGE

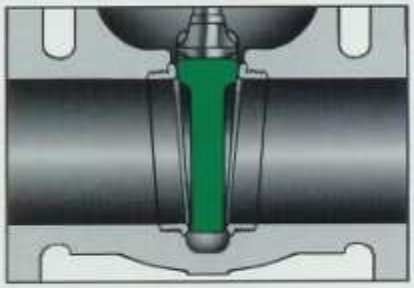

FLEXIBLE ROUND WEDGE PIONEERED BY VELAN

- Universal use for temperatures up to 1200°F (649°C).
- Flexibility compensates for seat face distortion.
- Compensates for deformation of body due to pipe stresses.
- Long cycle life.
- Ideal for processes with large temperature fluctuations to 1000°F (538°C).
- Assures valve tightness on both seats over wide range of pressures.
- Stem to wedge connection is inside the seating faces supporting the wedge ears during opening.

  More robust with less mass.

CLASSICAL SOLID WEDGE ON COMPETITIVE DESIGNS

- Wedge may cause severe jamming at temperatures over 200°F (93°C).
- Suitable for small valves (½–2", 15–50 mm).
- Wedge will stick when valve is closed hot and allowed to cool.
- No compensation for deformation of body due to pressure/ temperature or pipe stresses.
- Difficult to make valve tight on both seats due to seat face distortion.

SEAL WELDED SEATS VS SCREWED-IN SEATS

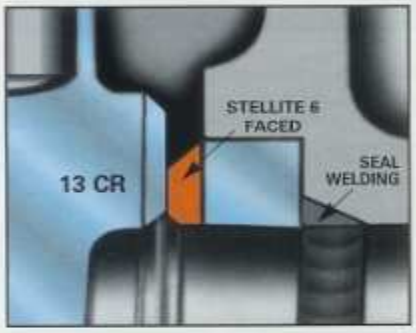

VELAN STANDARD GROUND AND LAPPED SEAL WELDED SEAT RINGS FACED WITH STELLITE 6

- Pioneered by Velan and considered state-of-the-art technology.
- Welded-in leakproof.
- Weld quality 100% tested.
- Stellite 6 seating faces for long service life.
- Ground and lapped to 2 RMS finish after weld-in.
- Standardized use for steam up to 850°F (454°C), oil and gas.
- Stellite face will wear less than the 13 CR wedge, which can easil be repaired or replaced.

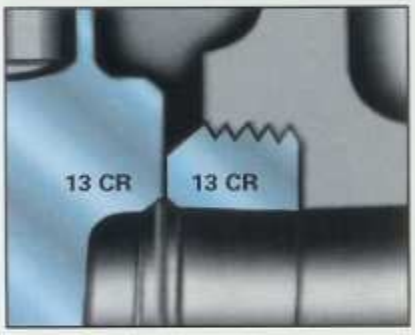

COMPETING SCREWED-IN SEATS IN 13 CR

- Can loosen up due to corrosion and cause substantial leakage.
- Replacement is difficult if not impossible.
- Threads can corrode and cause leakage.
- Seat is unsecured from unscrewing.
- Seat can become loose due to temperature fluctuations, corrosion or vibration, and can leak.
- Not suitable for steam service. Steam and other fluids will wire draw body threads of loose seats beyond repair.
- 13 CR seat suitable only for certain fluids.

VELAN API 600 GLOBE VALVES
FLAT AND CONICAL SEATS

FLAT SEAT

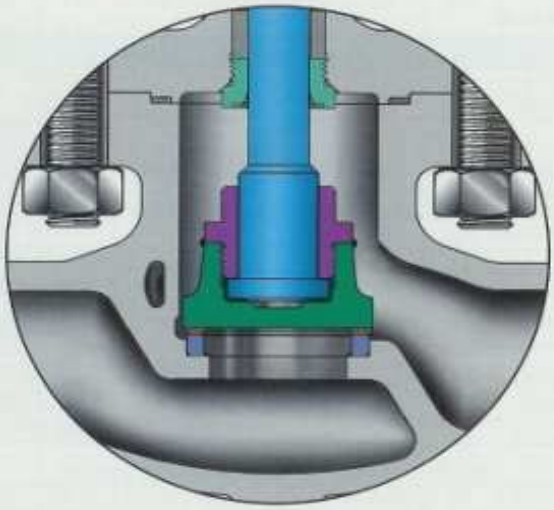

CONICAL SEAT

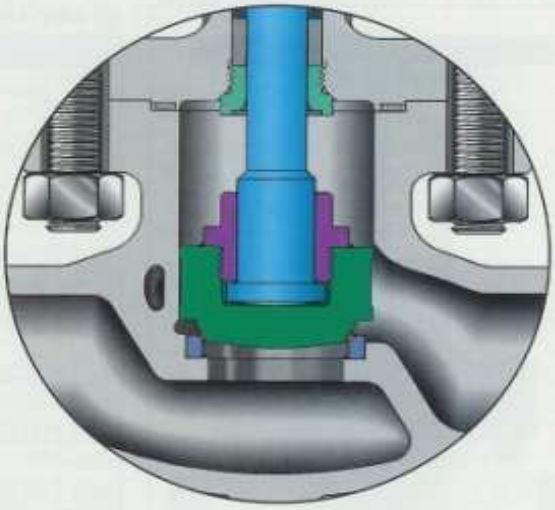

- Machining, lapping to close tolerances is easy.
- Flatness tolerance easy to control.
- Area contact wide seat.
- Disc is guided by the mating surface of the seat.
- Hard thrust pad prevents galling.
- Faster maintenance in-line. Flat seating faces can be lapped and checked for flatness easier.

- Line contact seal.
- Contact pressure increase by 1.5–5 with same stems and yokes.
- Seat has greater elasticity.
- Lower closing torques.
- Recommended for high pressure/temperature.

VELAN API 600 SWING CHECK VALVES

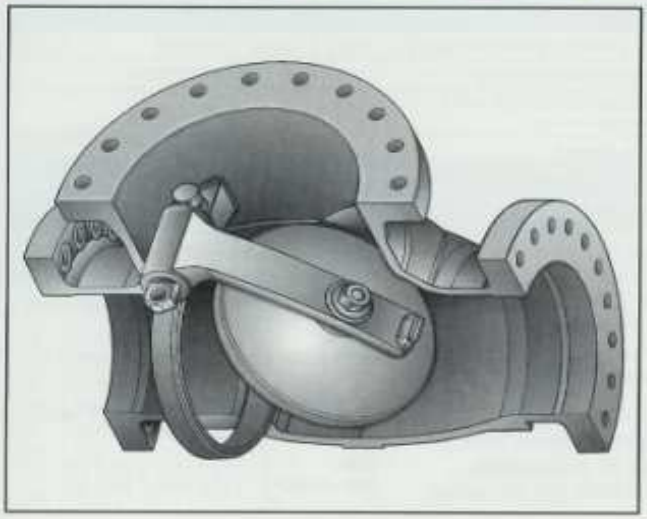

- Cage unit design with no penetration of body prevents:
  - *a)* Possibility of leakage with gasketed or packed hinge pin
  - *b)* Possibility of pin ejection.
- All parts are accessible from the top for easy servicing.
- Welded-in seat is Stellite 6 faced.
- Disc is free to rotate to prevent localized wear.
- Ground and lapped seating surfaces.

VELAN

CAST STEEL API 600 GATE VALVES, 2–60" (50–1500 mm)

ASME CLASSES 150, 300, 600, 900 AND 1500
WITH SINGLE OR DOUBLE PACKING, LEAK-OFF AND LIVE-LOADING

LIVE-LOADED GATE VALVES

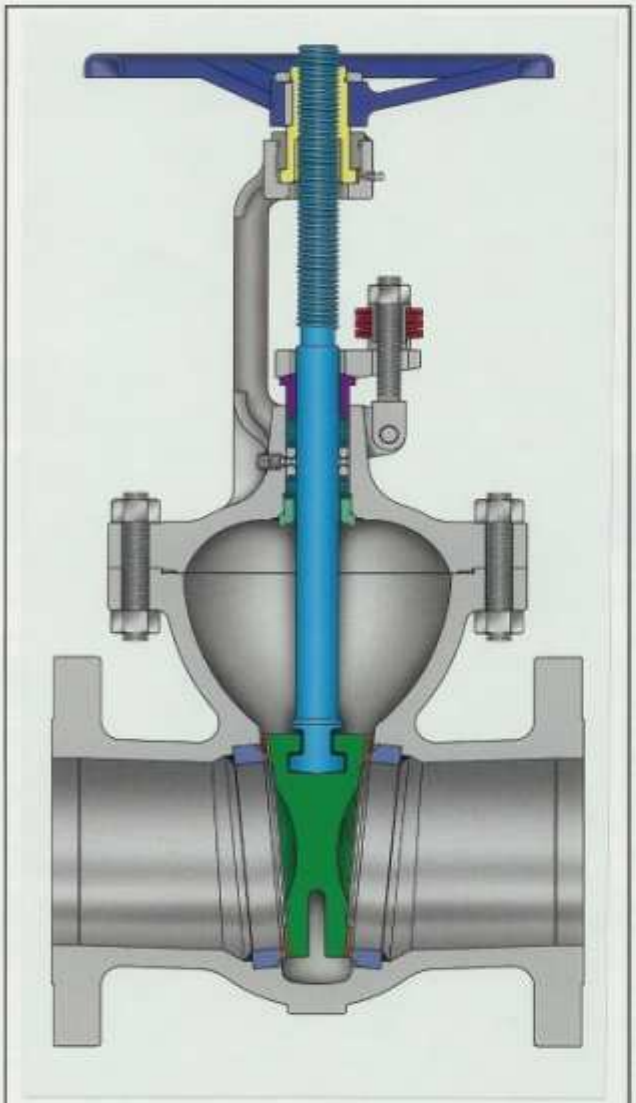

Classes 300, 600, 900 and 1500 have round bonnet and encased gasket.

For Bellows Seal Gate Valves ½–12" (15–300 mm) see catalog VEL-BS.

DESIGN FEATURES:

- **Safer and tighter stem seal.**
- **Short and narrow packing chamber** improves sealing effectiveness.
- **Long-life leakproof packing chamber** with double packing and leak-off or single set packing.

  Double packing: two sets of graphite packing rings compressed to 4000 psi. A lantern ring and leak-off provide option for removal of leakage, if any, from lower packing set.

  Single set packing: three or four graphite rings between braided rings, 80-90 lbs./cu. ft. density.
- **Live-loading.**
  Two sets of Belleville springs keep stem tight for long periods of time without maintenance.
- **Two-piece stem drive** is renewable in-line.
- **Stronger leakproof body-bonnet joint.**
  Class 150: Corrugated graphite-filled steel gasket.
  Class 300-600: Fully-encased spiral wound graphite-filled stainless steel gasket.
- **Welded-in seats** hardfaced with Stellite 6.
- **Flexible one-piece wedge**, hardfaced with Stellite 6 or 13 CR (solid 13 CR up to 8").
- **13 CR hardened stem** with mirror-like, burnished finish for longer packing life.

For dimensions see page 19.

FIGURE NUMBERS

CLASS	GATE
150	0064C –0 –2 –3
300	1064C –0 –2 –3
600	2064C –0 –2 –3
900	7064C –0 –2 –3
1500	3064C –0 –2 –3

Special low emission figure number designations:

0= Double packing, leak-off and live loading

2= Live-loading only

3= Double packing and leak-off only.

VELAN

CAST STEEL API 600 GLOBE VALVES, 2–16" (50–400 mm)

ASME CLASSES 150, 300, AND 600
WITH SINGLE OR DOUBLE PACKING, LEAK-OFF AND LIVE-LOADING

LIVE LOADED GLOBE VALVES

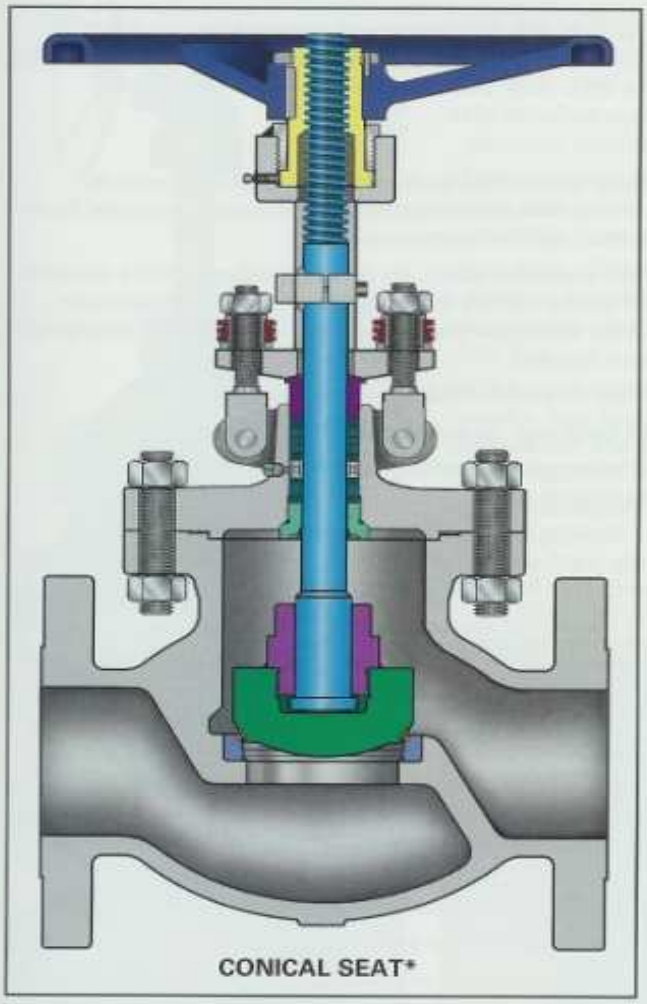

CONICAL SEAT*

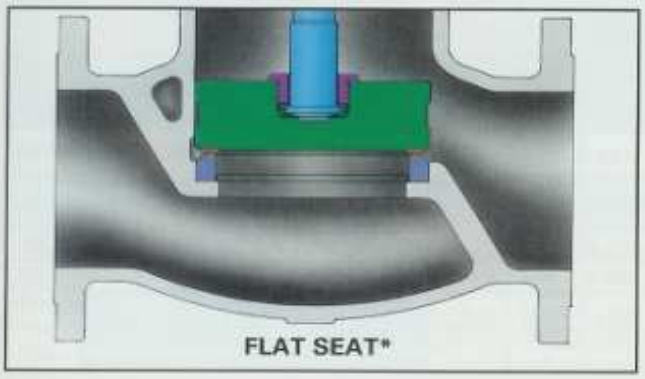

FLAT SEAT*

DESIGN FEATURES:

- **Safer and tighter stem seal.**
- **Short and narrow packing chamber** improves sealing effectiveness.
- **Long-life leakproof packing chamber** with double packing and leak-off or single set packing.

  Double packing: two sets of graphite packing rings compressed to 4000 psi. A lantern ring and leak-off provide option for removal of leakage, if any, from lower packing set.

  Single set packing: three or four graphite rings between braided rings, 80-90 lbs./cu. ft. density.
- **Live-loading.**
  Two sets of Belleville springs keep stem tight for long periods of time without maintenance.
- **Stronger leakproof body-bonnet joint.**
  Fully-encased graphite-filled SS 316 spiral wound gasket.
- **Stronger bolting** ensures joint tightness.
- **Weld-in seat**, hardfaced with Stellite 6.
- **Disc** hardfaced with Stellite 6 or 13 CR.
- **13 CR hardened stem** with mirror-like burnished finish for longer packing life

For other design features see page 20 and for dimensions see page 21.

**NOTE:* Most sizes and pressure classes have conical seats. Choice of flat or conical seat is manufacturer's option unless specified by customer.

FIGURE NUMBERS

CLASS	GATE
150	0074C -0 -2 -3
300	1074C -0 -2 -3
600	2074C -0 -2 -3

Special low-emission figure number designations:

0= Double packing, leak-off and live loading

2= Live-loading only

3= Double packing and leak-off only.

CAST CRYOGENIC GATE, GLOBE AND CHECK VALVES AUSTENITIC STAINLESS STEEL 2–30" (50–750 mm)

PRESSURE CLASSES 150–1500

CAST STEEL CRYOGENIC VALVES

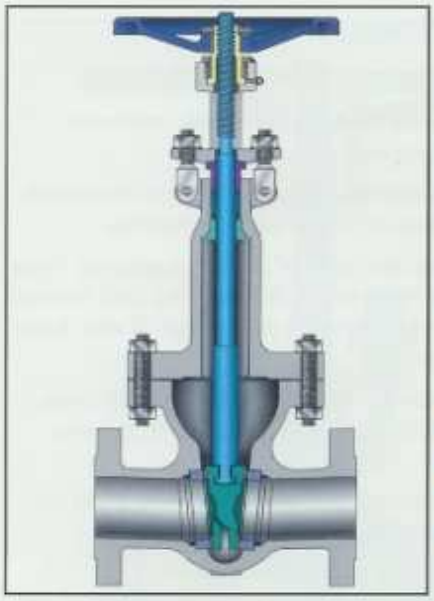

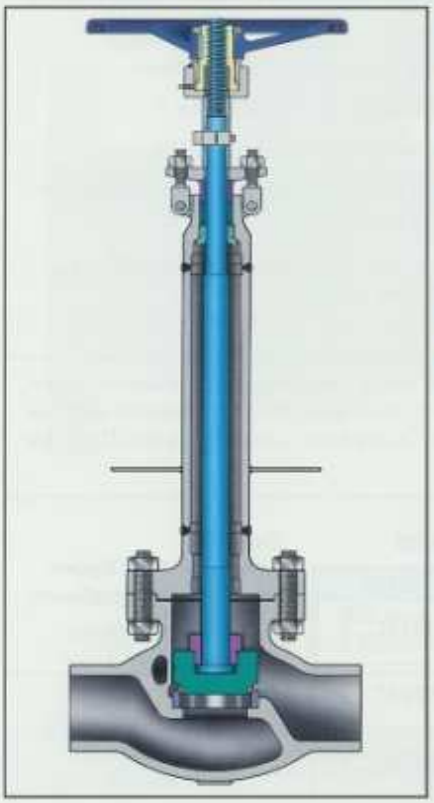

The production, transport and storage of liquified gases such as oxygen, nitrogen, argon, natural gas, hydrogen or helium (down to -425°F), presents several technical problems. Velan specially-adapted extended bonnet cast valves offer safe and efficient service.

MATERIALS:

- **Body and bonnet:** Austenitic stainless steel castings used for bodies and bonnets offer excellent impact strength, minimal heat loss and protection against corrosion.
- **Stem:** Austenitic stainless steel. To reduce galling, stems are also offered in A479 grade XM-19 with high tensile even at extreme low temperatures, excellent low friction and galling-free movement at points of stem contact.
- **Wetted parts:** All Austenitic stainless steel and Stellite 6.
- **Stem nut/yoke bushing:** Austenitic ductile iron Gr. D-2C.
- **Packing:** PTFE or graphite packing protected from freezing by a column of insulating gas.
- **Seating faces:** Stellite 6 is used to prevent seizing and galling. When extremely tight shutoff is required, globe and check valves are supplied with Neoflon, PTFE or other soft inserts.
- **Bolting:** Strain-hardened Austenitic stainless steel.
- **Lubrication of stem nut:** Exxon Nebula Lubriplate No. 930-AA or Shell Darina EPI or equivalent.

DESIGN FEATURES:

- **Extended bonnets** with sufficient gas column length, usually specified by customer, are supplied for all valves to keep stem packing at sufficient distance away from the cold fluid to remain functional.
- **Flexible wedges** with Stellite seating faces for cryogenic service.
- **Neoflon inserts** are available for globe, piston, and swing check discs.
- **Cleaning:** All cryogenic valves are thoroughly degreased and cleaned and pipe ends are sealed to prevent contamination.

TABLE OF LIQUIFIED GASES

Type	Boiling Point °C	Boiling Point °F	Liquid Density lb/ft.³	Type	Boiling Point °C	Boiling Point °F	Liquid Density lb/ft.³
Natural gas (LNG)	-168	-270	26	Air	-194.4	-318	57.87
Methane (CH_4)	-161.5	-258	26.20	Nitrogen (N^2)	-195.8	-320	50.45
Oxygen (O_2)	-182.9	-296	71.20	Hydrogen(H_2)	-252.7	-423	4.43
Argon (Ar)	-185.9	-303	87.40	Helium (He)	-268.9	-452	7.82
Carbon Dioxide (CO_2)	-78.5	-109	50.60	Absolute zero	-273.16	-460	–

VELAN BLOCK & BLEED GATE VALVES *FOR CHEMICAL AND PETROCHEMICAL INDUSTRIES*

Valve shown has a special "Pipeline" bonnet.

Standard bonnets with regular yoke also available.

DESIGN FEATURES:

- **Positive shut-off** with visual or remote proof of seat tightness.
- **No product contamination** absolute tightness
- **Dual seating.** Elastomer-to-metal seat plus metal-to-metal secondary seal.
- **Fire Safe.** The metal-to-metal seat ensures tightness if the secondary elastomer seat is damaged during the fire.
- **PTFE seat insert** resists corrosive media, has high abrasion resistance and operates up to +400°F (204°C).
- **Seat hardfaced** with SS 410 and seal welded.

STYLE A
2–12" SEAT - WEDGE DESIGN

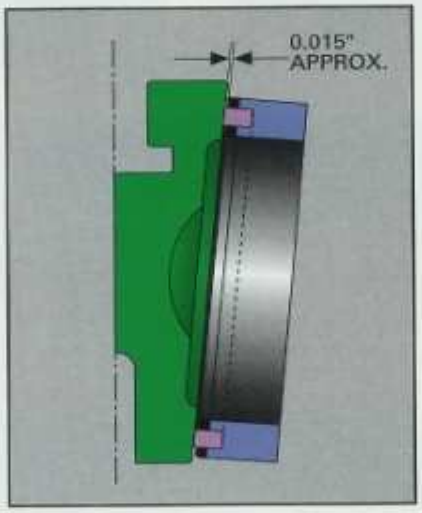

STYLE B
14–60" SEAT–WEDGE DESIGN*

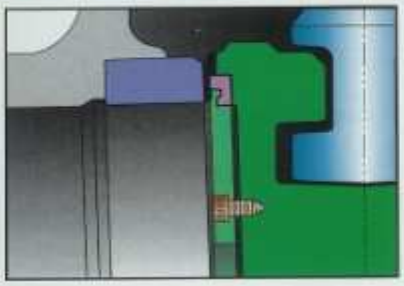

AVAILABLE RANGE

Velan block and bleed gate valves are available in the following sizes:
Class 150: carbon steel, flanged or butt weld, 2–60" (50–1500 mm).
Class 300: carbon steel, flanged or butt weld, 2–36" (50–900 mm).

EASY IN-LINE VALVE RESEATING

Seats are hardfaced with SS 410 and welded-in for lifetime service. A worn soft seat insert can easily be replaced after removal of wedge from the body. Shutoff flow and relieve pressure before replacing the seat insert.

TEST PLUG

*14–24" (350–600 mm) may be style A or B at manufacturer's option

SPECIFICATIONS FOR SEAT INSERT MATERIALS

TYPE	MAXIMUM OPERATING °F TEMPERATURE	NOT RECOMMENDED
PTFE	-100°F to +400°F -73°C to +204°C	Fluorinated hydrocarbons
Buna-N	-20°F to +200°F -29°C to +93°C	Halogenated hydrocarbons, Nitrobenzene, Aniline, Hydraulic fluids, Skydrol, Cellulube, Pydrazil, Acetone
Viton	-20°F to +400°F -29°C to +240°C	Acetone, Anines, Anhydrous ammonia, Hot Hydrofluoric acid, Ester, Ethers

ACCESSORIES

GEAR ACTUATORS

Gearing is generally applied to valves to make operation easier. The gearing may be of the spur, bevel or worm type–any of which may be applied to Velan valves. The gears and gear brackets may be either cast iron or cast steel and may have cast or cut teeth, depending on the loads and the application. Gearing is too often neglected when valve operation is considered, resulting in unsatisfactory operation requiring expensive changes.

	CLASS	OPTIONAL	STANDARD
GATE	150	6–24"	30–60"
	300	6–16"	18–36"
	600	4–12"	14–36"
	900	3–6"	8–10"
	1500	3–4"	6–10"
GLBOE	150	6–12"	14–16"
	300	6–12"	14–16"
	600	4–8"	—
	900	2–4"	—
	1500	2–4"	—

ELECTRIC ACTUATORS

Motorized controls may be applied to valves of almost any size for operation in practically any position or location. All units, whether installed directly on a valve or on a floor stand, can be manually operated in case of power failure. The units are available for either alternating or direct current. Motor units supplied by Velan are the high torque type with windings impregnated to resist both oil and moisture. They are completely weather-proof, explosion-proof (optional) and dust and steam tight. Various sizes and styles are available for different applications, and systems and can be varied to fit special requirements.

CYLINDER ACTUATORS

The most commonly-used cylinders are actuated by air, but oil and water types are also available if required. In all designs, the valve stem normally serves as a piston rod with disc fastened directly to them. Tail rods are also supplied as standard equipment to serve as position indicators and for emergency opening.

Handwheels and gear heads can be mounted on top of cylinders for operation in an emergency which may arise due to the loss of operating medium in the cylinder.

Velan cylinders can be furnished with mounting pads for one of the commercial cylinders or valve positioners which provide throttling control. High pressure cylinders are also available for specific applications.

VALVE ACTUATOR SIZING

The Velan philosophy for selecting an actuator is to calculate the required torque and thrust to operate the valve at the required service conditions. A reasonable margin of excess actuator capability over that required is always allowed for in the final actuator selection, but grossly oversized actuators are avoided.

Because of the wide variations in system operating conditions, actuator sizing is based on the following:

ACTUATOR TYPE	LINE PRESSURE	DIFFERENTIAL PRESSURE (CLOSED)	POWER SUPPLY
ELECTRIC	Specified by customer	Specified by customer	Voltage, type, phase and frequency specified by customer
PNEUMATIC	Specified by customer	Specified by customer	Air pressure specified by customer
HYDRAULIC	Specified by customer	Specified by customer	Hydraulic pressure specified by customer
HANDWHEEL/ GEAR ACTUATED	70% of CWP(1) unless otherwise advised by customer	70% of CWP(1) unless otherwise advised by customer	200 lb. rimpull(2) unless otherwise advised by customer

(1) CWP = cold working pressure per ASME B16.34 at 100°F (e.g., Class 150, CWP = 285 psig, 70% of CWP = 200 psig).

(2) Rimpull is defined as the total tangential force acting on the handwheel (e.g., 200 lb. rimpull requires 100 lb force per hand). This rimpull figure is given for closing/opening conditions. For running conditions (travel from open to closed or vice versa), the rimpull is considerably less. For details, contact the company.

ACCESSORIES

CHAIN WHEELS

Valves must sometimes be located too far above the floor for convenient handwheel operation. In such cases a chain wheel may be substituted for the handwheel, either when the valve is ordered or in the field. Chain wheels are available for all types of Velan cast steel valves. They may be substituted for a plain handwheel or may be used in addition to the existing handwheel.

All Velan chain wheels are equipped with guards or guides, not only to keep the chain from jumping the wheel, but also to hold the chain in close contact with a large portion of the circumference of the handwheel or gear wheel.

The handwheel is designed to seat or unseat the larger size valves with a minimum of effort.

FLOOR STANDS

Velan floor stands are made of cast iron with bronze or steel parts where necessary.

They are divided into two main classes: one class with handwheels but no gearing, and the other class with cranking actuators and worm gearing or worm and spur gearing combined.

The floor stands are available in a number of sizes, and the size to be used depends on the stem size and stem load of the valve.

BYPASSES ARE AVAILABLE FOR ALL VELAN CAST STEEL VALVES USE THE TABLE BELOW AS A GUIDE TO BYPASS SIZE.

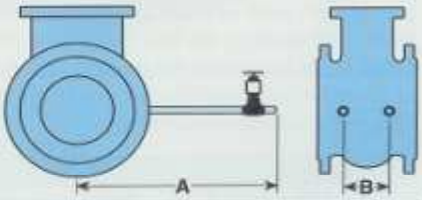

API 600 GLOBE *(Note: Dimensions are in inches)*

SIZE in	CLASS 150				CLASS 300				CLASS 600			
	BY-PASS	A	ELBOW	B	BY-PASS	A	ELBOW	B	BY-PASS	A	ELBOW	B
3	½	13.00	½	6.38	½	11.50	½	6.13	½	13.00	½	8.25
4	½	13.00	½	7.50	½	16.50	½	7.00	½	15.00	½	9.50
6	¾	11.13	¾	11.00	¾	14.75	¾	11.00	¾	13.00	¾	11.00
8	¾	11.50	¾	14.00	¾	13.00	¾	14.00	¾	13.00	¾	11.25
10	1	18.00	1	14.88	1	18	1	15.00	—	—	—	—
12	1	18.00	1	19.00	1	18	1	18.00	—	—	—	—
14	1	18.00	1	19.50	1	18	1	19.50	—	—	—	—
16	1	18.00	1	24.00	1	18	1	24.00	—	—	—	—

API 600 GATE *(Note: Dimensions are in inches)*

SIZE in	CLASS 150				CLASS 300				CLASS 600			
	BY-PASS	A	ELBOW	B	BY-PASS	A	ELBOW	B	BY-PASS	A	ELBOW	B
3	½	10.50	½	4.75	½	12.25	½	6.25	½	12.31	½	6.25
4	½	13.00	½	5.63	½	13.00	½	6.50	½	14.00	½	6.50
6	¾	14.00	¾	6.13	¾	14.00	¾	9.00	¾	15.00	¾	9.00
8	¾	17.00	¾	6.81	¾	17.00	¾	10.00	¾	17.38	¾	10.00
10	1	18.00	1	7.69	1	18.00	1	11.00	1	18.50	1	11.00
12	1	18.00	1	8.13	1	18.00	1	12.50	1	18.50	1	12.50
14	1	23.00	1	9.00	1	18.50	1	16.00	1	18.50	1	19.13
16	1	24.00	1	10.00	1	18.50	1	15.50	1	20.50	1	20.00
18	1	26.63	1	12.00	1	19.50	1	14.00	1	20.50	1	24.00
20	1	26.63	1	12.00	1	19.50	1	16.00	1	20.50	1	24.00
24	1	28.75	1	12.25	1	22.50	1	18.25	1	22.50	1	32.00
30	1	33.63	1	14.00	1	26	1	24.00	1	27	1	36.00
36	1	34.00	1	15.25	1	28	1	50.00	1	30	1	35.00
42	1	32.00	1	18.00	—	—	—	—	—	—	—	—
48	1	38.00	1	22.00	—	—	—	—	—	—	—	—
60	1	44.00	1	24.00	—	—	—	—	—	—	—	—

API 600 CAST STEEL VALVE
FLANGES, WEIGHTS AND CV FLOW COEFFICIENTS

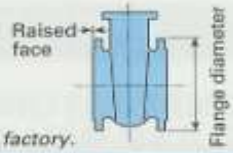

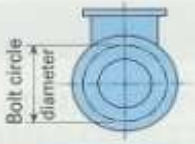

DRILLED AND FACED AS FOLLOWS: 2–24" ASME B16.5

(1) 30"and up: ASME B16.47 Series A MSS-SP-44. For Series B (API 605) contact the factory.

ASME CLASS	DIMENSIONS IN INCHES						WEIGHT IN LBS.						CV FLOW FLOW COEFFICIENTS		
	SIZE in	FLANGE DIAM.	BOLT CIRCLE DIAM.	HOLE DIAM.	QTY. HOLES	DIAM. BOLTS	GATE		SWING CHECK		GLOBE				
							BW	FF	BW	FF	BW	FF	GATE	GLOBE	CHECK
150 1/16 RAISED FACE	2	6.00	4.75	0.75	4	⅝	42	48	31	40	48	55	260	35	95
	2½	7.00	5.50	0.75	4	⅝	50	59	35	44	54	58	420	60	150
	3	7.50	6.00	0.75	4	⅝	67	78	59	78	82	102	625	92	220
	4	9.00	7.50	0.75	8	⅝	97	117	98	121	120	152	1150	180	410
	6	11.00	9.50	0.88	8	¾	180	198	179	212	240	280	2650	430	950
	8	13.50	11.75	0.88	8	¾	278	319	314	360	405	435	4850	810	1750
	10	16.00	14.25	1.00	12	⅞	456	515	513	586	500	550	7750	1400	2800
	12	19.00	17.00	1.00	12	⅞	646	738	602	823	1050	1200	11,500	1950	4100
	14	21.00	18.75	1.13	12	1	875	954	765	960	1700	1850	14,000	2500	6200
	16	23.50	21.25	1.13	16	1	1120	1200	1120	1300	2300	2500	19,000	3400	8400
	18	25.00	22.75	1.25	16	1⅛	1485	1570	1450	1660	2640	2850	24,000	4500	11,000
	20	27.50	25.00	1.25	20	1⅛	1825	1910	1700	2050			31,000	—	13,500
	24	32.00	29.50	1.38	20	1¼	2870	2960	2900	3300			45,000	—	20,000
	30(1)	38.75	36.00	1.37	28	1¼	4705	4750	6300	7000			73,000	—	33,000
	36(1)	46.00	42.75	1.63	32	1½	6500	6850	8500	9500			108,000	—	48,000
	42(1)	53.00	49.50	1.63	36	1½	10,000	11,000					142,000	—	—
	48(1)	59.50	56.00	1.63	44	1½	14,000	15,000					190,000	—	—
	60(1)	73.00	69.25	1.88	52	1¾	22,600	26,600					300,000	—	—
300 1/16 RAISED FACE	2	6.50	5.00	0.75	8	⅝	46	60	37	45	45	60	260	35	95
	2½	7.50	5.88	0.88	8	¾	55	76	49	57	63	72	420	60	150
	3	8.25	6.62	0.88	8	¾	90	115	70	96	88	114	625	92	220
	4	10.00	7.88	0.88	8	¾	136	166	110	150	130	171	1150	180	410
	6	12.50	10.62	0.88	12	¾	245	314	204	265	261	337	2650	430	950
	8	15.00	13.00	1.00	12	⅞	415	506	360	455	447	565	4850	810	1750
	10	17.50	15.25	1.13	16	1	646	762	582	650	1000	1150	7750	1325	2800
	12	20.50	17.75	1.25	16	1⅛	900	1100	825	945	1300	1550	11,500	1950	4100
	14	23.00	20.25	1.25	20	1⅛	1392	1720	1200	1350	1800	2100	14,000	2500	6200
	16	25.50	22.50	1.38	20	1¼	1870	2220	1500	1800	2300	2700	19,000	3400	8400
	18	28.00	24.75	1.38	24	1¼	2405	2960	2000	2400	2640	3200	23,500	4500	11,000
	20	30.50	27.00	1.38	24	1¼	3260	3700	2600	3000			30,000	—	13,500
	24	36.00	32.00	1.63	24	1½	4250	5100	3000	4050			44,000	—	20,000
	30(1)	43.00	39.25	1.88	28	1¾	8550	9000					73,000	—	—
	36(1)	50.00	46.00	2.13	32	2	13,500	15,500					108,000	—	—
600 1/4 RAISED FACE	2	6.50	5.00	0.75	8	⅝	60	72	48	52	60	72	260	35	95
	2½	7.50	5.88	0.88	8	¾	89	102	59	87	89	100	420	60	150
	3	8.25	6.62	0.88	8	¾	130	157	96	130	130	150	625	92	220
	4	10.75	8.50	1.00	8	⅞	224	275	167	225	213	285	1150	180	410
	6	14.00	11.50	1.13	12	1	394	540	332	476	415	515	2650	430	950
	8	16.50	13.75	1.25	12	1⅛	726	884	525	715	1050	1220	4850	800	1750
	10	20.00	17.00	1.38	16	1¼	1125	1405	1000	1250	1550	1830	7750	1250	2800
	12	22.00	19.25	1.38	20	1¼	1490	1812	1500	1750			11,500	—	4100
	14	23.75	20.75	1.50	20	1⅜	2200	2500	1750	2050			13,000	—	5900
	16	27.00	23.75	1.62	20	1½	3000	3700	2400	3100			18,000	—	7800
	18	29.25	25.75	1.75	20	1⅝	4000	4800	3200	4000			22,000	—	9900
	20	32.00	28.50	1.75	24	1⅝	5600	6800	4500	6100			27,000	—	12,000
	24	37.00	33.00	2.00	24	1⅞	8000	9800	6400	7600			40,000	—	18,000
	30(1)	44.50	40.25	2.12	28	2	12,000	14,000					52,000	—	—
	36(1)	51.75	47.00	2.62	28	2½	17,000	19,500					72,000	—	—
900 1/4 RAISED FACE	2	8.50	6.50	1.00	8	¾	150	185	135	165			230	—	80
	2½	9.63	7.50	1.12	8	1	235	270	175	210			560	—	200
	3	9.50	7.50	1.00	8	¾	235	270	175	210			560	—	200
	4	11.50	9.25	1.25	8	1⅛	270	355	245	330			1050	—	380
	6	15.00	12.50	1.25	12	1¼	830	980	485	635			2400	—	875
	8	18.50	15.50	1.50	12	1⅜	1220	1500	700	900			4200		1325
	10	21.50	18.50	1.50	16	1⅜	2000	2400					6750		1525
1500 1/4 RAISED FACE	2	8.50	6.50	1.00	8	¾	150	185	135	165			230	—	80
	2½	9.63	7.50	1.12	8	1	255	325	205	275			510	—	185
	3	10.50	8.00	1.25	8	1⅛	255	325	205	275			510	—	185
	4	12.25	9.50	1.37	8	1¼	430	520	340	430			925	—	330
	6	15.50	12.50	1.50	12	1⅜	1045	1205	805	965			2100	—	750
	8	19.00	15.50	1.75	12	1⅝	1850	2550	1350	2050			3650	—	1325
	10	23.00	19.00	2.00	12	1⅞	2600	3300					5850		

ENGINEERING DATA

PRESSURE-TEMPERATURE RATINGS
STANDARD CLASS VALVES, FLANGED AND BUTT WELD END

NOTE: FOR SPECIAL CLASS VALVES, WHICH HAVE HIGHER RATINGS CONTACT THE COMPANY.

CAST

ASTM MATERIAL STANDARD–TO ASME B16.34
psig/°F (bar/°C) CLASSES 150–4500

A216 Gr. WCB

TEMP.	WORKING PRESSURE by classes, psig						
°F	150	300	600	900	1500	2500	4500
100	285	740	1480	2220	3705	6170	11110
200	260	675	1350	2025	3375	5625	10120
300	230	655	1315	1970	3280	5470	9845
400	200	635	1270	1900	3170	5280	9505
500	170	600	1200	1795	2995	4990	8980
600	140	550	1095	1640	2735	4560	8210
650	125	535	1075	1610	2685	4475	8055
700	110	535	1065	1600	2665	4440	7990
750	95	505	1010	1510	2520	4200	7560
800	80	410	825	1235	2060	3430	6170
850(1)	65	270	535	805	1340	2230	4010
900(1)	50	170	345	515	860	1430	2570
950(1)	35	105	205	310	515	860	1545
1000(1)	20	50	105	155	260	430	770

(1) Permissible, but not recommended for prolonged usage above 800°F (427°C).

TEMP.	GAGE WORKING PRESSURE BY RATING NUMBER, bar						
°C	PN 20	PN 50	PN 100	PN 150	PN 250	PN 420	PN 760
38	19.8	51.1	102.1	153.2	255.3	425.5	765.8
50	19.2	50.1	100.2	150.2	250.4	417.3	751.1
100	17.7	46.4	92.8	139.1	231.9	386.5	695.7
150	15.8	45.2	90.5	135.7	226.1	376.9	678.4
200	14.0	43.8	87.6	131.3	219.1	365.2	657.3
250	12.1	41.7	83.4	125.2	208.6	347.7	625.8
300	10.2	38.7	77.5	116.2	193.7	322.8	581.0
350	8.4	37.0	73.9	110.9	184.8	308.0	554.4
375	7.4	36.5	72.9	109.4	182.3	303.9	547.0
400	6.5	34.5	69.0	103.5	172.5	287.5	517.5
425	5.6	28.8	57.5	86.3	143.8	239.6	431.4
450(1)	4.7	20.0	40.1	60.1	100.2	166.9	300.5
475(1)	3.7	13.5	27.1	40.6	67.7	112.9	203.2
500(1)	2.8	8.8	17.6	26.4	44.0	73.3	131.9
525(1)	1.9	5.2	10.4	15.5	25.9	43.2	77.7
540(1)	1.3	3.3	6.5	9.8	16.3	27.2	48.9

A217 Gr. WC6

TEMP.	WORKING PRESSURE by classes, psig						
°F	150	300	600	900	1500	2500	4500
100	290	750	1500	2250	3750	6250	11250
200	260	750	1500	2250	3750	6250	11250
300	230	720	1445	2165	3610	6015	10830
400	200	695	1385	2080	3465	5775	10400
500	170	665	1330	1995	3325	5540	9965
600	140	605	1210	1815	3025	5040	9070
650	125	590	1175	1765	2940	4905	8825
700	110	570	1135	1705	2840	4730	8515
750	95	530	1065	1595	2660	4430	7970
800	80	510	1015	1525	2540	4230	7610
850	65	485	975	1460	2435	4060	7305
900	50	450	900	1350	2245	3745	6740
950	35	320	640	955	1595	2655	4785
1000	20	215	430	650	1080	1800	3240
1050	20(1)	145	290	430	720	1200	2160
1100	20(1)	95	190	290	480	800	1440

(1) For welding end valves only. Flanged end ratings terminate at 1000°F (538°C).

TEMP.	GAGE WORKING PRESSURE BY RATING NUMBER, bar						
°C	PN 20	PN 50	PN 100	PN 150	PN 250	PN 420	PN 760
38	20.0	51.7	103.4	155.2	258.6	431.0	775.9
50	19.5	51.7	103.4	155.2	258.6	431.0	775.9
100	17.7	51.4	103.0	154.5	257.4	429.1	772.4
150	15.8	49.6	99.6	149.2	248.8	414.5	746.3
200	13.9	48.1	95.9	143.9	239.8	399.6	719.6
250	12.1	46.2	92.4	138.6	231.0	385.0	692.6
300	10.2	42.9	85.8	128.6	214.4	357.2	642.8
350	8.3	40.3	80.3	120.8	201.1	335.4	603.5
375	7.4	38.9	77.6	116.6	194.1	323.3	582.0
400	6.5	36.5	73.3	109.8	183.1	305.0	548.7
425	5.6	35.2	70.2	105.4	175.7	292.6	526.3
450	4.6	33.7	67.7	101.4	169.1	281.9	507.2
475	3.7	31.7	63.4	95.1	158.2	263.9	475.0
500	2.8	25.3	50.6	75.7	126.1	210.1	378.6
525	1.9	18.1	36.3	54.5	90.8	151.2	272.5
550	1.4(1)	12.7	25.4	38.1	63.6	105.9	190.7
575	1.4(1)	8.8	17.7	26.3	44.0	73.4	132.1
600(2)	1.4(1)	6.0	12.0	18.3	30.3	50.5	90.8

(2) Not to be used over 593°C.

A217 Gr. WC9

TEMP.	WORKING PRESSURE by classes, psig						
°F	150	300	600	900	1500	2500	4500
100	290	750	1500	2250	3750	6250	11250
200	260	750	1500	2250	3750	6250	11250
300	230	730	1455	2185	3640	6070	10925
400	200	705	1410	2115	3530	5880	10585
500	170	665	1330	1995	3325	5540	9965
600	140	605	1210	1815	3025	5040	9070
650	125	590	1175	1765	2940	4905	8825
700	110	570	1135	1705	2840	4730	8515
750	95	530	1065	1595	2660	4430	7970
800	80	510	1015	1525	2540	4230	7610
850	65	485	975	1460	2435	4060	7305
900	50	450	900	1350	2245	3745	6740
950	35	375	755	1130	1885	3145	5655
1000	20	260	520	780	1305	2170	3910
1050	20(1)	175	350	525	875	1455	2625
1100	20(1)	110	220	330	550	915	1645

(1) For welding end valves only. Flanged end ratings terminate at 1000°F (538°C).

TEMP.	GAGE WORKING PRESSURE BY RATING NUMBER, bar						
°C	PN 20	PN 50	PN 100	PN 150	PN 250	PN 420	PN 760
38	20.0	51.7	103.4	155.2	258.6	431.0	775.9
50	19.5	51.7	103.4	155.2	258.6	431.0	775.9
100	17.7	51.6	103.1	154.6	257.7	429.5	773.2
150	15.8	50.3	100.3	150.6	250.9	418.3	753.0
200	13.9	48.8	97.5	146.3	244.1	406.6	731.9
250	12.1	46.3	92.7	139.1	231.9	386.3	695.0
300	10.2	42.9	85.8	128.6	214.4	357.2	642.8
350	8.3	40.3	80.3	120.8	201.1	335.4	603.5
375	7.4	38.9	77.6	116.6	194.1	323.3	582.0
400	6.5	36.5	73.3	109.8	183.1	305.0	548.7
425	5.6	35.2	70.2	105.4	175.7	292.6	526.3
450	4.6	33.7	67.7	101.4	169.1	281.9	507.2
475	3.7	31.7	63.4	95.1	158.2	263.9	475.0
500	2.8	27.7	55.7	83.4	139.0	231.8	417.4
525	1.9	21.6	43.3	64.9	108.4	180.6	325.3
550	1.4(1)	15.4	30.7	46.1	77.0	127.9	230.7
575	1.4(1)	10.6	21.1	31.7	52.7	87.7	158.1
600(2)	1.4(1)	6.9	13.8	20.7	34.6	57.4	103.2

(2) Not to be used over 593°C.

ENGINEERING DATA

A217 Gr. C5

TEMP. °F	WORKING PRESSURE by classes, psig						
	150	300	600	900	1500	2500	4500
100	290	750	1500	2250	3750	6250	11250
200	260	745	1490	2235	3725	6205	11170
300	230	715	1430	2150	3580	5965	10740
400	200	705	1410	2115	3530	5880	10585
500	170	665	1330	1995	3325	5540	9965
600	140	605	1210	1815	3025	5040	9070
650	125	590	1175	1765	2940	4905	8825
700	110	570	1135	1705	2840	4730	8515
750	95	530	1055	1585	2640	4400	7920
800	80	510	1015	1525	2540	4230	7610
850	65	485	965	1450	2415	4030	7250
900	50	370	740	1110	1850	3085	5555
950	35	275	550	825	1370	2285	4115
1000	20	200	400	595	995	1655	2985
1050	20(1)	145	290	430	720	1200	2160
1100	20(1)	100	200	300	495	830	1490
1150	20(1)	60	125	185	310	515	925
1200	15(1)	35	70	105	170	285	515

(1) For welding end valves only. Flanged end ratings terminate at 1000°F (538°C).

TEMP. °C	GAGE WORKING PRESSURE BY RATING NUMBER, bar						
	PN 20	PN 50	PN 100	PN 150	PN 250	PN 420	PN 760
38	20.0	51.7	103.4	155.2	258.6	431.0	775.9
50	19.5	51.7	103.3	155.0	258.6	430.3	774.6
100	17.7	51.1	102.3	153.4	257.2	425.9	766.8
150	15.8	49.3	98.6	148.2	246.8	411.2	740.5
200	13.9	48.7	97.4	146.1	243.7	406.0	730.8
250	12.1	46.3	92.7	139.1	231.9	386.3	695.0
300	10.2	42.8	85.8	128.6	214.4	357.2	642.8
350	8.3	40.3	80.3	120.8	201.1	335.4	603.5
375	7.4	38.9	77.5	116.4	193.8	323.0	581.5
400	6.5	36.5	72.6	109.2	181.8	303.0	545.4
425	5.6	35.2	70.1	105.4	175.6	292.4	526.1
450	4.8	33.7	67.1	100.8	167.9	280.1	504.0
475	3.7	27.6	55.0	82.6	137.7	229.7	413.5
500	2.8	21.3	42.6	64.0	106.4	177.4	319.5
525	1.9	16.1	32.3	48.3	80.5	134.1	241.7
550	1.4(1)	12.1	24.3	36.0	60.3	100.5	180.8
575	1.4(1)	9.0	17.9	26.8	44.5	74.1	133.2
600	1.4(1)	6.2	12.6	18.8	31.1	52.0	93.4
625	1.3(1)	3.9	8.1	12.0	20.0	33.3	59.9
650	1.0(1)	2.4	4.8	7.2	11.7	19.7	35.5

A217 Gr. C12

TEMP. °F	WORKING PRESSURE by classes, psig						
	150	300	600	900	1500	2500	4500
100	290	750	1500	2250	3750	6250	11250
200	260	750	1500	2250	3750	6250	11250
300	230	730	1455	2185	3640	6070	10925
400	200	705	1410	2115	3530	5880	10585
500	170	665	1330	1995	3325	5540	9965
600	140	605	1210	1815	3025	5040	9070
650	125	590	1175	1765	2940	4905	8825
700	110	570	1135	1705	2840	4730	8515
750	95	530	1065	1595	2660	4430	7970
800	80	510	1015	1525	2540	4230	7610
850	65	485	975	1460	2435	4060	7305
900	50	450	900	1350	2245	3745	6740
950	35	375	755	1130	1855	3145	5655
1000	20	255	505	760	1270	2115	3805
1050	20(1)	170	345	515	855	1430	2570
1100	20(1)	115	225	340	565	945	1695
1150	20(1)	75	150	225	375	630	1130
1200	20(1)	50	105	155	255	430	770

(1) For welding end valves only. Flanged end ratings terminate at 1000°F (538°C).

TEMP. °C	GAGE WORKING PRESSURE BY RATING NUMBER, bar						
	PN 20	PN 50	PN 100	PN 150	PN 250	PN 420	PN 760
38	20.0	51.7	103.4	155.2	258.6	431.0	775.9
50	19.5	51.7	103.4	155.2	258.6	431.0	775.9
100	17.7	51.6	103.1	154.6	257.7	429.5	773.2
150	15.8	50.3	100.3	150.6	250.9	418.3	753.0
200	13.9	48.8	97.5	146.3	244.1	406.6	731.9
250	12.1	46.3	92.7	139.1	231.9	386.3	695.0
300	10.2	42.8	85.8	128.6	214.4	357.2	642.8
350	8.3	40.3	80.3	120.8	201.1	335.4	603.5
375	7.4	38.9	77.6	116.6	194.1	323.3	582.0
400	6.5	36.5	73.3	109.8	183.1	305.0	548.7
425	5.6	35.2	70.2	105.4	175.7	292.8	526.3
450	4.8	33.7	67.7	101.4	169.1	281.9	507.2
475	3.7	31.7	63.4	95.1	158.2	263.9	475.0
500	2.8	27.7	55.7	83.4	139.0	231.8	417.0
525	1.9	21.4	42.8	64.1	107.1	178.6	321.1
550	1.4(1)	15.0	30.0	45.0	75.0	125.1	225.0
575	1.4(1)	0.4	21.0	31.4	52.1	87.2	156.7
600	1.4(1)	7.2	14.3	21.5	35.8	59.9	107.5
625	1.4(1)	4.9	9.9	14.8	24.7	41.5	74.5
650	1.4(1)	3.4	7.2	10.7	17.8	29.7	53.1

A351 Gr. CF8M(3), A351 Gr. CF3M(2)

TEMP. °F	WORKING PRESSURE BY CLASSES, psig						
	150	300	600	900	1500	2500	4500
100	275	720	1440	2160	3600	6000	10800
200	235	620	1240	1860	3095	5160	9290
300	215	560	1120	1680	2795	4660	8390
400	195	515	1025	1540	2570	4280	7705
500	170	480	955	1435	2390	3980	7165
600	140	450	900	1355	2255	3760	6770
650	125	445	890	1330	2220	3700	6660
700	110	430	870	1305	2170	3620	6515
750	95	425	855	1280	2130	3560	6410
800	80	420	845	1265	2110	3520	6335
850	65	420	835	1255	2090	3480	6265
900	50	415	830	1245	2075	3460	6230
950	35	385	775	1160	1930	3220	5795
1000	20	350	700	1050	1750	2915	5245
1050(2)	20(1)	345	685	1030	1720	2865	5155
1100(2)	20(1)	335	670	915	1525	2545	4575
1150(2)	20(1)	235	475	710	1185	1970	3550
1200(2)	20(1)	185	370	555	925	1545	2775
1250(2)	20(1)	145	295	440	735	1230	2210
1300(2)	20(1)	115	235	350	585	970	1750
1350(2)	20(1)	95	190	290	480	800	1440
1400(2)	20(1)	75	150	225	380	630	1130
1450(2)	20(1)	60	115	175	290	485	875
1500(2)	20(1)	40	85	125	205	345	620

TEMP. °C	GAGE WORKING PRESSURE BY RATING NUMBER, bar						
	PN 20	PN 50	PN 100	PN 150	PN 250	PN 420	PN 760
38	19.0	49.7	99.3	149.0	248.3	413.8	744.8
50	18.3	48.1	96.3	144.4	240.6	401.0	721.9
100	16.1	42.3	84.6	126.8	211.0	351.7	633.2
150	14.8	38.6	77.1	115.7	192.4	320.8	577.7
200	13.6	35.8	71.2	107.0	178.5	297.2	535.2
250	12.0	33.5	66.8	100.3	167.0	278.2	500.8
300	10.2	31.6	63.1	95.0	158.1	263.6	474.6
350	8.3	30.4	61.0	91.3	152.3	253.9	456.9
375	7.4	29.6	59.9	89.7	149.3	249.1	448.3
400	6.5	29.3	59.0	88.2	147.2	245.4	441.9
425	5.6	29.0	58.3	87.3	145.6	242.9	437.2
450	4.8	29.8	57.7	86.7	144.3	240.4	432.8
475	3.7	28.7	57.3	86.1	143.4	239.0	430.3
500	2.8	27.3	54.8	82.1	136.7	228.0	410.5
525	1.9	25.2	50.6	75.9	126.4	210.7	379.2
550(2)	1.4(1)	24.0	47.8	71.8	119.6	199.5	359.0
575(2)	1.4(1)	22.8	45.4	68.3	114.1	190.1	341.8
600(2)	1.4(1)	19.9	39.9	59.7	99.5	166.0	298.8
625(2)	1.4(1)	15.7	31.7	47.4	79.2	131.7	237.3
650(2)	1.4(1)	12.6	25.3	37.9	63.2	105.7	189.8
675(2)	1.4(1)	10.1	20.8	30.8	51.4	86.1	154.8
700(2)	1.4(1)	8.3	16.9	25.1	42.0	69.8	125.8
725(2)	1.4(1)	6.9	13.9	21.1	35.0	58.2	104.9
750(2)	1.4(1)	5.7	11.3	17.1	28.7	47.7	85.7
775(2)	1.4(1)	4.6	9.0	13.7	22.8	38.1	68.4
800(2)	1.4(1)	3.5	7.0	10.8	17.4	29.2	52.6

(1) For welding end valves only. Flanged end ratings terminate at 1000°F (538°C).
(2) **CF3M**: Not to be used over 850°F (454°C).
(3) At temperatures over 1000°F (538°C), use only when the carbon content is 0.04% or higher.

SPECIFICATION OF CAST VALVE MATERIALS

BODY AND BONNET, WEDGE–DISC–PACKING FLANGE

DESCRIPTION		CARBON STEEL			ALLOY STEEL				STAINLESS STEEL				
					1¼ CR ½ Mo	2¼ CR-1 Mo	5 CR	9 CR-1Mo	13 CR		316	316L	304
	ASTM DESIGNATION	A216 WCB	A352 LCB	A352 LCC	A217 WC6	A217 WC9	A217 C5	A217 C12	A217 CA15	A296 CA40	A351 CF8M	A351 CF3M	A351 CF8
COMPOSITION %	Carbon	0.25(1)	0.25(1)	0.25	0.20	0.18	0.20	0.20	0.15	0.10-0.40	0.08	0.03	0.08
	Manganese	1.00	1.00	1.20	0.50-0.80	0.40-0.70	0.40-0.70	0.35-0.65	1.00	1.00	1.50	1.50	1.50
	Phosphorus	0.04	0.04	0.04	0.04	0.40	0.04	0.04	0.04	0.04	0.04	0.04	0.04
	Sulphur	0.045	0.045	0.045	0.045	0.045	0.045	0.045	0.040	0.040	0.040	0.040	0.040
	Silicon	0.60	0.60	0.60	0.60	0.60	0.75	1.00	1.50	1.50	1.50	1.50	2.00
	Nickel	0.50	—	0.50	0.50	0.50	0.50	0.50	1.00	1.00	9.00-12.00	9.00-13.00	8.00-11.00
	Chromium	0.50	—	0.50	1.00-1.50	2.00-2.75	4.00-6.50	8.00-10.00	11.5-14.0	11.5-14.0	18.00-21.00	17.00-21.00	18.00-21.00
	Molybdenum	0.20	—	0.20	0.45-0.65	0.90-1.20	0.45-0.65	0.90-1.20	0.50	0.50	2.0-3.00	2.0-3.00	0.50
	Copper	0.30	0.30	0.30	0.50	—	0.50	0.50	—	—	—	—	—
Heat Treat.		Anneal	Quench and Temper		Temper	Temper	Temper	Temper	Solution anneal				
Tensile psi min.		70,000	65,000-90,000	70,000-95,000	70,000-90,000	70,000-90,000	90,000-115,000	90,000-115,000	90,000-115,000	100,000	70,000	70,000	70,000
Yield psi min.		36,000	35,000	40,000	40,000	40,000	60,000	60,000	65,000	70,000	30,000	30,000	30,000
Elong. % Min.		22	24	22	20	20	18	18	18	15	30	30	35
R. Area % Min.		35	35	35	35	35	35	35	30	25	—	—	—
Hardness HB		187 max.	197 max.	200 max.	207 max.	207 max.	241 max.	241 max.	327-381	475 min.	—	187 max.	—
Parts		BODIES–BONNETS–LARGE DISCS							DISC MATERIALS		BODIES–BONNETS–DISCS		

(1) Velan standard: 0.25 or less.

TRIM SPECIFICATION

		BAR STOCK								CAST		
		CR 13		Stainless Steels			Monel		Hastelloy	Monel	Stellite 6	Austenitic Ductile
	ASTM DESIGNATION	A 479 410*	A 582 416*	A 479 316 St. Hard.	A 479 316	A 564 630	B 164 Monel	AMS 4676A K-Monel	B574 N 10276	A 494 M-25S	AMS 5387 A	A 439 D-2C
COMPOSITION %	Carbon	0.15	0.15	0.08	0.08	0.07	0.3	0.25	0.010	0.25	0.9–1.4	2.90
	Manganese	1.00	1.25	2.00	2.00	1.00	2.0	1.50	1.0	1.50	1.0	1.80–2.40
	Phosphorus	0.040	0.06	0.045	0.045	0.040	–	0.02	0.04	0.03	0.04	0.08
	Sulphur	0.030	0.15 min.	0.030	0.030	0.030	0.024	0.010	0.03	0.03	0.04	–
	Silicon	1.00	1.00	1.00	1.00	1.00	0.5	1.00	0.08	3.5-4.5	1.5	1.00–3.00
	Nickel	–	–	10.00–14.00	10.00–14.00	3.00–5.00	63.0	63.00–70.00	Balance	Balance	3.0	21.00–24.00
	Chromium	11.50–13.50	12.00–14.00	16.00–18.00	16.00–18.00	15.00–17.50	–	–	14.5–16.5	–	27.0–31.0	0.50
	Molybdenum	–	–	2.00–3.00	2.00–3.00	–	–	–	15.0–17.0	–	1.5	–
	Copper	–	–	–	–	3.00–5.00	28.0–34.0	Balance	–	27.0-33.0	–	–
	Aluminum	–	–	–	–	–	3.00	–	3.00	–	–	–
	Cobalt	–	–	–	–	–	–	–	–	–	Balance	–
	Tungsten	–	–	–	–	–	–	–	–	–	3.5-5.5	–
	Iron	–	–	–	–	–	–	–	–	3.50	3.0	–
Special Condition		Temper	Hard	Level 2	–	–	Hot worked	Hot Fin.	–	Age Hard.	–	–
Heat Treat.		Class 2	Hard Temper	Sol. Ann.	Sol. Ann.	H 1100	–	–	–	–	–	–
Tensile psi min.		110,000	–	95,000	75,000	140,000	80,000	140,000	100,000	–	130,000	58,000
Yield psi min.		85,000	–	75,000	30,000	115,000	40,000	100,000	41,000	–	–	28,000
Elong. % min.		15	–	25	30	14	30	20	40	–	1	20
R. Area % min.		45	–	40	40	45	–	–	–	–	–	–
Hardness HB		269 max.	293–352	–	–	302 min.	–	326 min.	–	300 min.	344 min.	121–171

SOUR SERVICE VALVES

To meet **NACE STANDARD MR0175** Velan manufactures the complete range of valves shown in this catalog in compliance with NACE standard MR0175. Trim materials must be selected by customers from table based on experience in corrosion resistance against sulphides (sour gas) found in processing crude oil.

13 CR or Monel trim also available in soft form (less than 237 HB). Non-cobalt hardfacing also available.

TRIM CODE	STEM	DISC	SEAT	BONNET BOLTING
NA	410 or 420 (13 CR) Rc 22 Maximum	CA 15 Rc 22 Max. or Body Material HF 13 CR Rc 22 Maximum	Body Material HF Stellite 6	B7M 2HM Rc 22 Maximum
NB	316	316 HF Stellite 6 or 316	Body Material HF Stellite 6	B7M/2HM or B8M/8
NC	Monel K	Body Material HF Monel	Body HF Stellite 6	B7M/2HM or B8M/8
NS	SPECIAL TO CUSTOMER REQUIREMENTS			

VELAN

CAST CARBON, STAINLESS OR ALLOY STEEL API 600 BOLTED BONNET GATE VALVES, 2–60" (50–1500 mm)

ASME CLASSES 150, 300, 600, 900 AND 1500

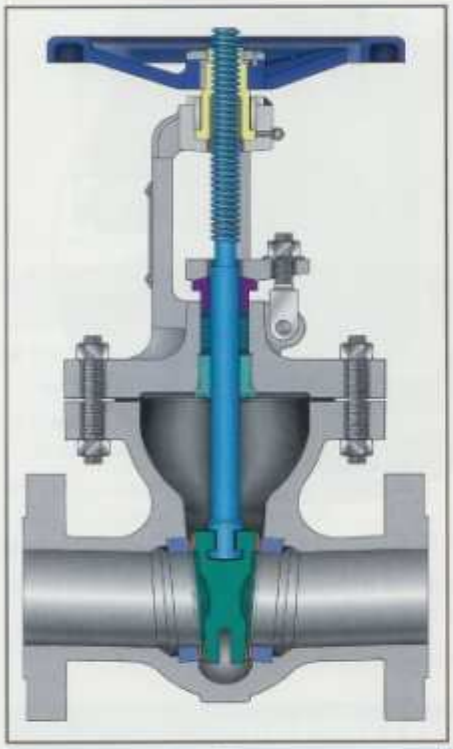

CLASS	FIGURE NUMBER
150	0064C
300	1064C
600	2064C
900	7064C
1500	3064C

DESIGN FEATURES:

- **Universal Trim.** 13 CR stem, wedge in CA 15 or 13 CR faced, and Stellited seat suitable for applications up to 850°F (454°C).
- **Seat face** Stellited, ground and lapped to a mirror finish.
- **Flexible Wedge** with low center stem-wedge contact, in solid CA15 (13 CR) or hardfaced with 13 CR, SS 316, Monel or Stellite. Wedge is ground and lapped to a mirror finish and tightly guided to prevent dragging and seat damage. A Stellite 6 hardfaced CF8M wedge is also available.
- **Non-rotating stem** with precision Acme threads and burnished finish. Double Acme for faster operation.
- **Body and bonnet joint** accurately machined. Gasket materials on page 3, details on page 13.

STANDARD MATERIALS

PART	MATERIALS			
Body(1)	WCB	WC6	WC9	CF8M
Bonnet(1)	WCB	WC6	WC9	CF8M
Stem(1)(3)	SS 410			SS 630, 600 or SS 316
Wedge(1)	CA 15 or 13 CR faced WCB	CA 15 or 13 CR faced WC6	CA 15 or 13 CR faced WC9	CF8M
Seat(1)(2)	Stellite 6 faced carbon steel	Stellite 6 faced F11	Stellite 6 faced F22	Stellite 6 faced F316
Packing flange	Carbon steel			Stainless steel
Gland bushing	Carbon steel			Stainless steel
Packing ring(1)	Graphite			Graphite
Gland stud	Gr. B or B7(4)			F316, B8M or 630(5)
Gland nut	Gr. 2H			Gr. 8M
Body/bonnet nut	Gr. 2H	Gr. 4		Gr. 8M
Body/bonnet stud	B7	B16		B8M or 630
Back seat(1)(3)	SS 410			SS 316
Gasket(1)	Class 150: corrugated steel/graphite 300-1500: spiral wound stainless steel/graphite			
Key	Carbon steel			
Yoke bushing	Carbon steel			Stainless steel
Bearing	Steel			
Handwheel nut	Malleable iron or steel			
Handwheel(1)	Malleable iron or steel			
Grease fitting	Steel			
Groove pin	Carbon steel			Stainless steel
Bushing	Carbon steel			Stainless steel
Washer	Carbon steel			Stainless steel
Name plate	Stainless steel			
Identification tag	Stainless steel			
Rivet	Stainless steel			
Stem nut	A 439 Austenitic ductile iron Gr. D-2C			

(1) Other materials available. (2) Stellited. (3) Hardened.
(4) For eye bolts Gr.B, for studs B7 is used.
(5) For eye bolts F316, for studs B8M or 630 is used.

DESIGN SPECIFICATIONS

ITEM	APPLICABLE SPECIFICATION
Wall thickness and general valve design	API 600
Pressure - temperature rating	ASME B16.34
Face-to-face dimensions for butt weld and flanged valves	ASME B16.10
Flange design	ASME B16.5
Butt welding design	ASME B16.25
Materials	ASTM

- **Body and bonnet** castings are precision machined. One-piece bonnet up to 12" (300 mm) for better alignment and fewer parts.
- **Gland** has two-piece construction for easy alignment.
- **Flanges:**
  Classes 150–300: 1/16" raised face,
  Class 600 –1500: ¼" raised face.
  Finish 125–250 AARH for all valves.
- **Rotating stem nut** is Austenitic ductile iron Gr. D-2C renewable in line (as shown). Thrust bearings are supplied as follows:

  150–300: 10–12" (250–30 mm), 1 bearing (top),
  16" (400 mm) and up, two bearings

  600: 6" (150 mm) and up
  900–1500: 6" (150 mm) and up.

GATE VALVE DIMENSIONS (CLASSES 150–600)

SIZE	ASME 150 (PN 20)						ASME 300 (PN 50)					ASME 600 (PN 100)				
in mm	A(3) BW	A(3) FL	B(1)	C(1)	D	E	A(3)	B(1)	C(1)	D	E	A(3)	B(1)	C(1)	D	E
2 50	8.50 216	7.00 178	15.63 397	20.38 518	2.00 51	8 203	8.50 216	15.63 397	20.38 518	2.00 51	8 203	11.50 292	15.66 398	20.51 521	2.00 51	8 203
2½ 65	9.50 241	7.50 191	16.88 429	22.14 562	2.50 64	8 203	9.50 241	16.94 430	22.20 564	2.50 64	8 203	13.00 330	18.59 472	24.19 614	2.50 64	10 254
3 80	11.12 282	8.00 203	18.56 471	24.26 616	3.00 76	10 254	11.12 283	20.22 514	26.38 670	3.00 76	10 254	14.00 356	21.63 549	27.78 706	3.00 76	10 254
4 100	12.00 305	9.00 229	22.25 565	28.32 719	4.00 102	10 254	12.00 305	23.90 607	30.95 786	4.00 102	10 254	17.00 432	25.75 654	32.76 832	4.00 102	14 356
6 150	15.88 403	10.50 267	31.19 792	38.00 965	6.00 152	14 356	15.87 403	32.31 821	40.38 1026	6.00 152	14 356	22.00 559	36.28 922	44.18 1122	6.00 152	20 508
8 200	16.50 419	11.50 292	38.19 970	46.13 1172	8.00 203	18 457	16.50 419	40.94 1040	50.16 1274	8.00 203	18 457	26.00 660	43.72 1110	53.25 1353	7.88 200	24 610
10 250	18.00 457	13.00 330	47.16 1198	56.28 1430	10.00 254	20 508	18.00 457	49.19 1249	59.87 1521	10.00 254	20 508	31.00 787	49.06 1246	59.87 1521	9.75 248	30 762
12 300	19.75 502	14.00 356	55.91 1420	66.75 1695	12.00 305	20 508	19.75 502	59.00 1499	70.61 1763	12.00 305	20 508	33.00 838	61.13 1553	72.74 1848	11.75 298	30 762
14 350	22.50 572	15.00 381	61.50 1562	75.00 1905	13.25 337	24 610	30.00 762	61.38 1559	70.00 1778	13.25 337	24 610	35.00 889	72.50 1842	83.50 2121	12.88 327	(2)
16 400	24.00 610	16.00 406	68.75 1746	85.00 2159	15.25 387	24 610	33.00 838	68.75 1746	80.00 2032	15.25 387	30 762	39.00 991	82.25 2089	91.00 2311	14.75 375	(2)
18 450	26.00 660	17.00 432	73.25 1861	90.00 2286	17.25 438	24 610	36.00 914	77.88 1978	94.00 2388	17.00 432	(2)	43.00 1092	87.06 2211	116.00 2946	16.50 419	(2)
20 500	28.00 711	18.00 457	83.00 2108	100.00 2540	19.25 489	30 762	39.00 991	86.50 2197	100.00 2540	19.00 483	(2)	47.00 1194	103.00 2616	123.00 3124	18.25 464	(2)
24 600	32.00 813	20.00 508	97.00 2464	115.00 2921	23.25 591	30 762	45.00 1143	101.25 2572	125.00 3175	23.00 584	(2)	55.00 1397	115.00 2921	132.00 3353	22.00 559	(2)
30 750	36.00 914	24.00 610	124.12 3153	140.00 3556	29.25 743	(2)	55.00 1397	123.81 3145	145.00 3683	29.25 743	(2)	56.00 1422	122.50 3112	150.00 3810	24.75 629	(2)
36 900	40.00 1016	28.00 711	146.68 3726	166.00 4216	35.25 895	(2)	68.00 1727	147.81 3754	185.00 4699	35.25 895	(2)	68.00 1727	145.13 3686	170.00 4318	29.00 737	(2)
42 1050	44.00 1118	31.00 787	166.50 4229	190.00 4826	40.25 1022	(2)	– –	– –	– –	– –	– –	– –	– –	– –	– –	– –
48 1200	– –	36.00 914	189.81 4821	214.00 5436	46.00 1168	(2)	– –	– –	– –	– –	– –	– –	– –	– –	– –	–
60 1500	– –	42.00 1067	238.80 6066	268.00 6807	57.50 1461	(2)	– –	– –	– –	– –	– –	– –	– –	– –	– –	– –

(1) Height does not include actuator. (2) Gear actuator. (3) Buttweld and flanged valves have the same end-to-end dimensions for Class 300 and up.

CLASSES 900-1500

SIZE	ASME 900 (PN 150)					ASME 1500 (PN 250)				
in mm	A(3)	B(1)	C(1)	D	E	A(3)	B(1)	C(1)	D	E
2 50	14.50 368	21.25 540	29.00 737	1.88 48	10 254	14.50 368	21.25 540	29.00 737	1.88 48	10 254
3 80	15.00 381	25.75 654	34.50 876	2.88 73	14 356	18.50 470	25.75 654	34.50 876	2.75 70	14 356
4 100	18.00 457	28.75 730	37.50 953	3.88 99	18 457	21.50 546	28.75 730	37.50 953	3.63 92	18 457
6 150	24.00 610	39.00 991	49.00 1245	5.75 146	20 508	27.75 705	39.00 991	49.00 1245	5.38 137	(2)
8 200	29.00 737	51.75 1315	62.75 1594	7.50 191	(2)	32.75 832	45.25 1149	60.00 1524	7.00 178	(2)
10 250	33.00 838	57.75 1467	67.25 1708	9.38 238	(2)	39.00 991	57.75 1467	71.00 1803	8.75 222	(2)

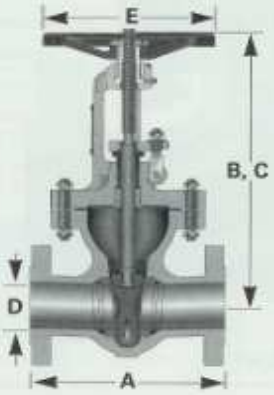

BW = Butt weld
FL = Flanged

B = Center to Top Open
C = Dismantling Height

Class 900–2500 forged gate valves also available.

See page 33 for valve weights and CVs.

VELAN

CAST CARBON, STAINLESS OR ALLOY STEEL API 600 BOLTED BONNET GLOBE AND STOP CHECK VALVES, 2–16" (50 – 400 mm) ASME CLASSES 150, 300 AND 600

NOW THE ONLY API 600 GLOBE VALVE WITH NONROTATING STEM

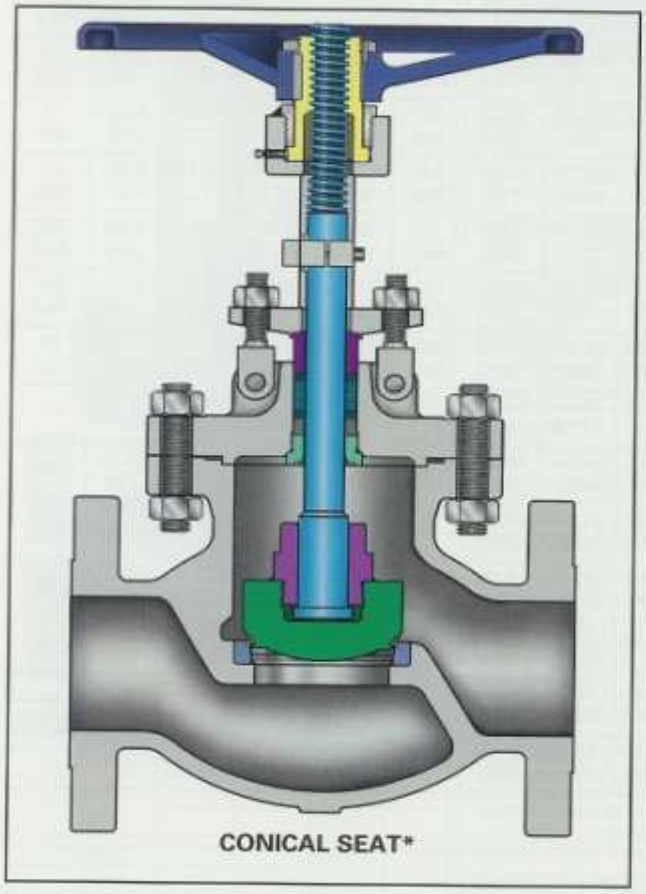

CONICAL SEAT*

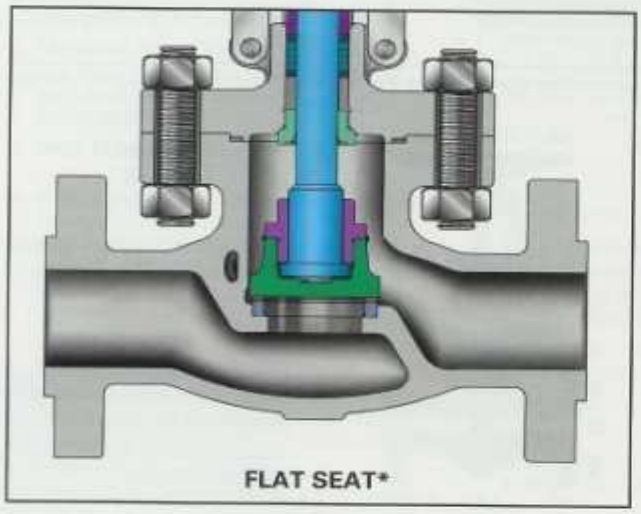

FLAT SEAT*

DESIGN FEATURES:

- **Non-rotating Stem** with precision Acme threads and burnished finish. Valve suitable for horizontal installation.
- **Universal Trim.** 13 CR stem, 13 CR faced disc and Stellite 6 faced seats suitable for service up to 850°F.
- **Seat** face Stellited, ground and lapped to a mirror finish. Conical seat machined to 8 RMS.
- **Flat disc.** Floating stem-disc engagement, hardfaced with 13 CR, Stellite 6, SS 316 or Monel, ground and lapped with seat. Disc in SS 316 hardfaced with Stellite 6 also available.
- **Tapered disc.** Disc is guided by the mating surface of the seat, hardfaced with 13 CR, Stellite 6, SS 316 or Monel, ground and lapped with seat. Disc in SS 316 hardfaced with Stellite 6 also available. 2–6" (50–150 mm) valves may have solid CA15 (13 CR) discs.
- **Body and bonnet.** Castings are precision machined. One-piece bonnet for better alignment, fewer parts.
- **Stuffing box** finish to 63 AARH or better.
- **Body and bonnet joint** accurately machined. Fully enclosed gasket. Gasket materials on page 3. Details on page 13.
- **Gland** has two-piece construction for easy alignment.
- **Rotating Stem nut.** Austenitic ductile iron Gr. D-2C, renewable in-line.
- **Torque arm.** To reduce wear on packing rings, to enable better sealing and to reduce torque.
- **Impactor handwheels.** Globe and stop check valves require higher closing torques than gate valves with the same seat diameter and pressure class. The most economical mechanism for tight shutoff is the impactor handwheel. Two lugs cast under the wheel strike simultaneous blows and give 3–10 times the closing force of standard handwheels. Impactor handwheels are supplied at manufacturer's option unless specified by customer (see page 21).
- **Flanges.** Class 150–300: 1/16" raised face. Class 600: 1/4" raised face. Finish 125–250 AARH for all valves.

***NOTE:** Most sizes and pressure classes have conical seats. Choice of flat or conical seat is manufacturer's option unless specified by customer.

GLOBE VALVE DIMENSIONS

SIZE	ASME 150 (PN 20)					ASME 300 (PN 50)					ASME 600 (PN 100)				
in mm	A	B[1]	C[1]	D	E	A	B[1]	C[1]	D	E	A	B[1]	C[1]	D	E
2 50	8.00 203	16.85 428	20.88 530	2.00 51	8 203.2	10.50 267	16.85 428	20.88 530	2.00 51	8 203	11.50 292	17.10 434	21.13 537	2.00 51	10 254
2½ 65	8.50 216	17.10 434	21.25 540	2.50 64	10 254	11.50 292	17.10 434	21.25 540	2.50 64	10 254	13.00 330	18.67 474	22.88 581	2.50 64	10 254
3 80	9.50 241	18.42 468	22.75 578	3.00 76	10 254	12.50 318	18.42 468	22.75 578	3.00 76	10 254	14.00 356	20.19 513	24.13 613	3.00 76	14 356
4 100	11.50 292	20.88 530	26.18 665	4.00 102	14 356	14.00 356	20.88 530	26.18 665	4.00 102	14 356	17.00 432	23.88 607	29.25 743	4.00 102	24[2][3] 610
6 150	16.00 406	23.75 603	32.00 813	6.00 152	24 610	17.50 445	26.38 670	32.88 835	6.00 152	24[2][3] 610	22.00 559	31.22 793	37.88 962	6.00 152	24[2][3] 610
8 200	19.50 495	30.73 780	38.38 975	8.00 203	24 610	22.00 559	32.00 813	38.88 988	8.00 203	24[2]or[4] 610	26.00 660	41.75 1060	56.18 1427	7.88 200	[4]
10 250	24.50 622	39.25 997	42.18 1071	10.00 254	24[2][3] 610	24.50 622	42.34 1075	52.18 1325	10.00 254	24[2][3] 610	31.00 787	47.16 1198	59.00 1499	9.75 248	[4]
12 300	27.50 699	42.52 1080	53.00 1346	12.00 305	24[2]or[4] 610	28.00 711	46.19 1173	58.75 1492	12.00 305	[4]	– –	– –	– –	– –	– –
14 350	31.00 787	54.21 1377	65.44 1662	13.25 337	[4]	33.00 838	54.21 1377	65.44 1662	13.25 337	[4]	– –	– –	– –	– –	–
16 400	36.00 914	59.94 1522	72.63 1845	15.25 387	[4]	34.00 863	59.94 1522	72.63 1845	15.25 387	[4]	**Inclined Cast Class 900-2500 Globe Valves Also Available**				
18 450	38.50 978	59.62 1514	75.00 1905	17.50 444	[4]	38.50 978	59.62 1514	75.00 1905	17.50 444	[4]					

(1) Height does not include actuators. (2) Impactor handwheel. (3) Gear actuator is optional. (4) Gear actuator.

B = Center to Top Open
C = Dismantling Height

Forged globe valves classes 900–2500 also available.

See page 33 for valve weights and CVs.

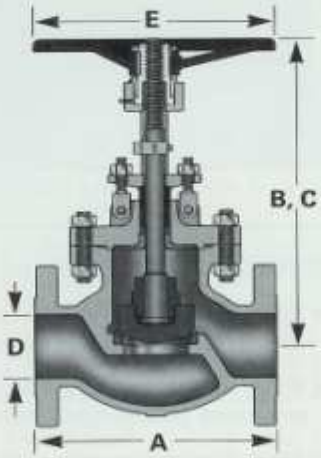

CLASSES 900-1500

SIZE	ASME 900 (PN 150)					ASME 1500 (PN 250)				
in mm	A	B[1]	C[1]	D	E	A	B[1]	C[1]	D	E
2 50	14.50 368	19.75 502	25.00 635	1.88 48	18 457	14.50 368	19.75 502	25.00 635	1.88 48	18 457
3 80	15.00 381	24.09 612	30.50 775	2.88 73	14[2][3] 356	18.50 470	24.09 612	30.50 775	2.75 70	14[2][3] 356
4 100	18.00 457	27.50 699	35.38 899	3.88 99	18[2][3] 457	21.50 546	27.50 699	35.38 899	3.63 92	18[2][3] 457

DESIGN SPECIFICATIONS

ITEM	APPLICABLE SPECIFICATION
Wall thickness and general valve design	API 600, BS 1873
Pressure–Temperature rating	ASME B16.34
Face-to-face dimensions for butt weld and flanged valves	ASME B16.10
Flange design	ASME B16.5
Butt welding design	ASME B16.25
Materials	ASTM

STANDARD MATERIALS

PART	MATERIALS			
Body[1]	WCB	WC6	WC9	CF8M
Bonnet[1]	WCB	WC6	WC9	CF8M
Seat[1][2]	Stellite 6 faced Carbon steel	Stellite 6 faced F11	Stellite 6 faced F22	Stellite 6 faced F316
Disc	CA 15 or 13 CR faced A105	CA 15 or 13 CR faced F11	CA 15 or 13 CR faced F22	CF8M or F316
Disc nut	Carbon steel	SS 304 or 316		
Stem[1][3]	SS 410			SS 316 or 630
Backseat[1][3]	SS 410			SS 316
Packing ring[1]	Graphite			
Gland stud	Gr. B or B7[4]			F316, B8M or 630[5]
Gland nut	Gr. 2H			Gr. 8M
Packing flange	Carbon steel			SS
Gland bushing	Carbon steel			SS
Bonnet stud	B7	B16		B8M or 630
Bonnet nut	Gr. 2H	Gr. 4		Gr. 8M
Hinge pin	Steel			SS
Gasket[1]	Spiral wound stainless steel/graphite			
Torque arm	Carbon steel			
Yoke bushing	Carbon steel			Stainless steel
Stem nut	A 439 Austenitic ductile iron Gr. D-2C			
Handwheel nut	Malleable iron or steel			
Handwheel[1]	Malleable iron or steel			

(1) Other materials available. (2) Stellited. (3) Hardened.
(4) For eye bolts Gr.B, for studs B7 is used.
(5) For eye bolts F316, for studs B8M or 630 is used.

CLASS	FIGURE NUMBERS		
	GLOBE	STOP CHECK	NEEDLE
150	0074C	0084C	0094C
300	1074C	1084C	1094C
600	2074C	2084C	2094C
900	7074C	7084C	7094C
1500	3074C	3084C	3094C

VELAN

CAST CARBON, STAINLESS OR ALLOY STEEL API 600 SWING CHECK VALVES, 2–36" (50–900 mm)

ASME CLASSES 150, 300, 600, 900 AND 1500

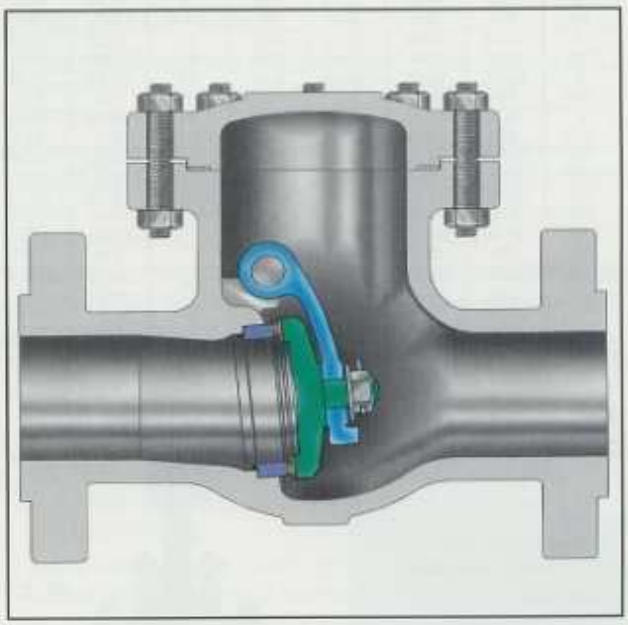

FIGURE NUMBERS

CLASS	FIG NO.	CLASS	FIG NO.
150	0114C	900	7114C
300	1114C	1500	3114C
600	2114C		

STANDARD MATERIALS

PART	MATERIALS			
Body[1]	WCB	WC6	WC9	CF8M
Seat[1][2]	Stellite 6 faced CS	Stellite 6 faced F11	Stellite 6 faced F22	Stellite 6 faced F316
Hinge pin[1][3]	SS 410			SS 630 or 660
Gasket[1]	Spiral wound stainless steel/graphite			
Cover stud	Gr. B7	B16		B8M or 630
Cover nut	Gr. 2H	Gr. 4		Gr. 8M
Cover[1]	WCB	WC6	WC9	CF8M
Washer	Commercial			
Disc[1]	CA 15 or 13 CR faced WCB	CA 15 or 13 CR faced WC6	CA 15 or 13 CR faced WC9	CF8M
Disc hanger	WCB	WC6	WC9	CF8M
Disc nut	Gr. 2H	Gr. 4		Gr. 8M

(1) Other materials available. (2) Stellited. (3) Hardened.

DESIGN FEATURES:

- **Body and cover.** Precision machined castings. ***Exclusive:*** Disc shaft does not penetrate body.
- **Body and cover joint.** Accurately machined, fully-enclosed gasket (gasket materials on page 3).
- **Disc.** Heavy one-piece construction to withstand the severe shock of check valve service. Hardfaced with 13 CR, Stellite 6, SS 316, or Monel, ground and lapped to mirror finish. Sizes 2–6" (50–150 mm) may have solid CA15 (13 CR) disc. SS 316 disc with Stellite 6 facing also available.
- **Disc assembly.** Disc is fastened securely to disc hanger with a lock nut and cotter pin. Disc is free to rotate to avoid localized wear. Disc hanger is supported on a sturdy disc carrier hinge pin of excellent bearing qualities. All parts are accessible from top for easy servicing.
- **Flanges.**
  Class 150/300: 1/16" raised face.
  Class 600: ¼" raised face.
  Finish: 125–250 AARH for all valves.

DESIGN SPECIFICATIONS

ITEM	APPLICABLE SPECIFICATION
Wall thickness and general valve design	API 600
Pressure–temperature rating	ASME B16.34
Face-to-face dimensions for butt weld and flanged valves	ASME B16.10
Flange design	ASME B16.5
Butt welding design	ASME B16.25
Materials	ASTM

See catalog VEL-PS for Class 900 and 1500 forged steel check valves.

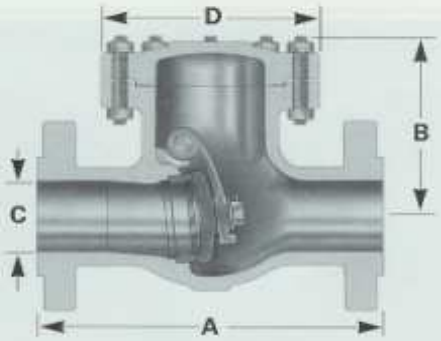

See page 33 for valve weights and CVs.

CHECK VALVE DIMENSIONS

SIZE	ASME 150 (PN 20)				ASME 300 (PN 50)				ASME 600 (PN 100)				ASME 900 (PN 150)				ASME 1500 (PN 250)			
in mm	A	B	C	D	A	B	C	D	A	B	C	D	A	B	C	D	A	B	C	D
2 50	8.00 203	5.75 146	2.00 51	6.75 171	10.50 267	6.00 152	2.00 51	6.75 171	11.50 292	6.25 159	2.00 51	6.75 171	14.50 368	9.50 241	1.88 48	8.63 219	14.50 368	9.50 241	1.88 48	8.63 219
2½ 65	8.50 216	6.25 159	2.50 64	6.75 171	11.50 292	6.25 159	2.50 64	6.75 171	13.00 330	6.50 165	2.50 64	7.50 191	16.50 419	10.00 254	2.25 57	9.25 235	16.50 419	10.00 254	2.25 57	9.25 235
3 80	9.50 241	7.75 197	3.00 76	8.50 216	12.50 318	7.75 197	3.00 76	8.50 216	14.00 356	8.75 222	3.00 76	9.75 248	15.00 381	10.50 267	2.88 73	10.50 267	18.50 470	11.50 292	2.75 70	10.50 267
4 100	11.50 292	8.75 222	4.00 102	10.25 260	14.00 356	8.75 222	4.00 102	10.25 260	17.00 432	9.25 235	4.00 102	12.00 305	18.00 457	11.75 299	3.88 99	12.25 311	21.50 546	12.00 305	3.63 92	12.25 311
6 150	14.00 356	10.75 273	6.00 152	12.50 318	17.50 445	10.75 273	6.00 152	12.50 318	22.00 559	11.50 292	6.00 152	15.75 400	24.00 610	15.00 381	5.75 146	15.25 387	27.75 705	16.50 419	5.38 137	16.00 406
8 200	19.50 495	12.75 324	8.00 203	15.75 400	21.00 533	12.75 324	8.00 203	15.75 400	26.00 660	13.50 343	7.88 200	15.75 400	29.00 737	19.25 489	7.50 191	18.38 467	32.75 832	21.00 533	7.00 178	20.75 527
10 250	24.50 622	15.50 394	10.00 254	18.50 470	24.50 622	16.25 413	10.00 254	18.50 470	31.00 787	16.75 425	9.75 248	19.50 495	– –	– –	– –	– –	– –	– –	– –	– –
12 300	27.50 699	17.00 432	12.00 305	20.50 521	28.00 711	17.00 432	12.00 305	20.50 521	33.00 838	18.50 470	11.75 298	22.50 572	– –	– –	– –	– –	– –	– –	– –	– –
14 350	31.00 787	19.63 499	13.25 337	23.00 584	33.00 838	19.63 499	13.25 337	23.00 584	35.00 889	20.93 532	12.88 327	26.25 667	– –	– –	– –	– –	– –	– –	– –	– –
16 400	34.00 864	22.00 559	15.25 387	26.50 673	34.00 864	22.50 572	15.25 387	26.50 673	39.00 991	23.38 594	14.75 375	28.25 718	– –	– –	– –	– –	– –	– –	– –	– –
18 450	38.50 978	25.00 635	17.13 435	28.50 724	38.50 978	25.00 635	17.13 435	28.50 724	43.00 1092	28.67 728	16.50 419	31.50 800	– –	Other sizes on application.						– –
20 500	38.50 978	26.50 673	19.00 483	31.50 800	40.00 1016	26.50 673	19.00 483	31.50 800	47.00 1194	27.12 689	18.25 464	35.25 895	– –							– –
24 600	51.00 1295	31.25 794	23.25 591	37.00 940	53.00 1346	31.25 794	23.25 591	37.00 940	55.00 1397	35.69 907	22.00 559	40.25 1022	– –	– –	– –	– –	– –	– –	– –	– –
30 750	60.00 1524	36.89 937	29.25 743	44.50 1130	– –	– –	– –	– –	– –	– –	– –	– –	– –	– –	– –	– –	– –	– –	– –	– –
36 900	77.00 1956	41.78 1061	35.25 895	53.00 1346	– –	– –	– –	– –	– –	– –	– –	– –	– –	– –	– –	– –	– –	– –	– –	– –

VELAN

CAST STAINLESS STEEL GATE VALVES API 603 INTEGRAL SEAT, 2–24", (50–600 mm)

FLANGED, ASME CLASSES 150, 300, WALL THICKNESS TO B16.34 WITH FLEXIBLE WEDGE

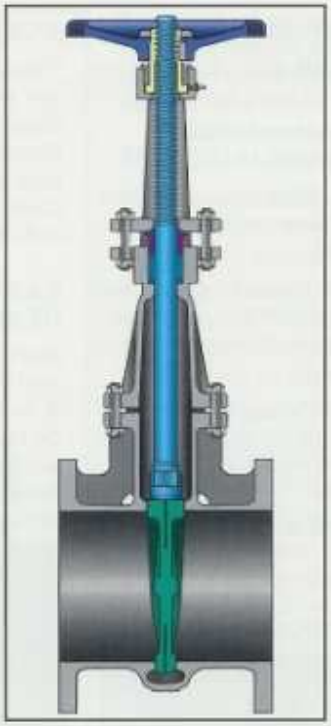

STANDARD MATERIALS

PART		MATERIAL
Body		A 351 Gr. CF8M
Bonnet		A 351 Gr. CF8M
Wedge		A 351 Gr. CF8M
Stem		Gr. 316
Gland		Gr. 316
Gland flange		A 351 Gr. CF8M
Yoke bushing		Gr. 316
Handwheel		Malleable iron (painted)
Handwheel nut		Carbon steel
Body/bonnet stud		Gr. B8M
Body/Bonnet nut		Gr. 8M
Gland stud		Gr. 304
Gland nut		Gr. 8M
Spring pin		Stainless steel
Gland packing	SX or SY GX or GY	PTFE Graphite
Gasket	SX or SY GX or GY	PTFE with stainless wire mesh Graphite with stainless steel foil
Name plate		Stainless steel
Stem nut		A 439 Austenitic ductile iron Gr. D-2C

Optional integral Stellited seat face available for longer service life.

DIMENSIONS AND WEIGHTS

SIZE	FLANGED, ASME 150 (PN 20)					FLANGED, ASME 300 (PN 50)				
in mm	A	B	C	D	WEIGHT lb (kg)	A	B	C	D	WEIGHT lb (kg)
2 50	7.00 178	13.00 330	8.00 203	2.00 51	30 13.6	8.50 216	14.00 356	8.00 203	2.00 51	44 20.0
2½ 65	7.50 191	15.75 400	8.00 203	2.50 64	46 20.9	9.50 241	16.75 425	8.00 203	2.50 64	60 27.2
3 80	8.00 203	17.75 451	8.00 203	3.00 76	52 23.6	11.13 283	18.50 470	8.00 203	3.00 76	86 39.0
4 100	9.00 229	21.50 546	10.00 254	4.00 102	80 36.4	12.00 305	22.63 575	10.00 254	4.00 102	134 60.8
6 150	10.50 267	28.25 718	10.00 254	6.00 152	135 61.2	15.88 403	29.75 756	10.00 254	6.00 152	247 112.07
8 200	11.50 292	36.50 927	14.00 356	8.00 203	222 100.9	16.50 419	39.19 995	14.00 356	8.00 203	390 177.3
10 250	13.00 330	45.00 1143	18.00 457	10.00 254	324 147.3	18.00 457	45.50 1150	18.00 457	10.00 254	630 285.8
12 300	14.00 356	60.25 1530	18.00 457	12.00 305	472 214.1	19.75 502	65.38 1661	18.00 457	12.00 305	880 400.0
14 350	15.00 381	65.00 1651	21.63 549	13.25 337	685 310.7	– –	– –	– –	– –	– –
16 400	16.00 406	75.00 1905	23.63 600	15.25 387	1000 453.5	– –	– –	– –	– –	– –
18 450	17.00 432	81.00 2057	29.50 749	17.25 438	1300 589.6	– –	– –	– –	– –	– –
20 500	18.00 457	93.00 2362	29.50 749	19.25 489	1500 680.3	– –	– –	– –	– –	– –
24 600	20.00 508	107.00 2718	31.50 800	23.25 591	2000 907.0	– –	– –	– –	– –	– –

FIGURE NUMBERS

CLASS	FIGURE NUMBERS	
	STAINLESS SEAT	STELLITE SEAT
150	0064C–13SX or GX	0064C–13SY or GY
300	1064C–13SX or GX	1064C–13SY or GY

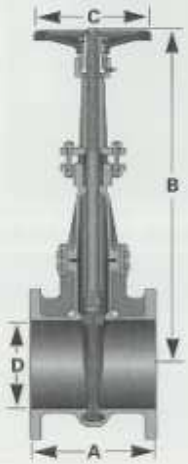

VELAN

CAST STAINLESS STEEL GLOBE VALVES API 603 INTEGRAL SEAT, 2–6" (50–150 mm)

FLANGED, ASME CLASSES 150, 300, WALL THICKNESS TO B16.34

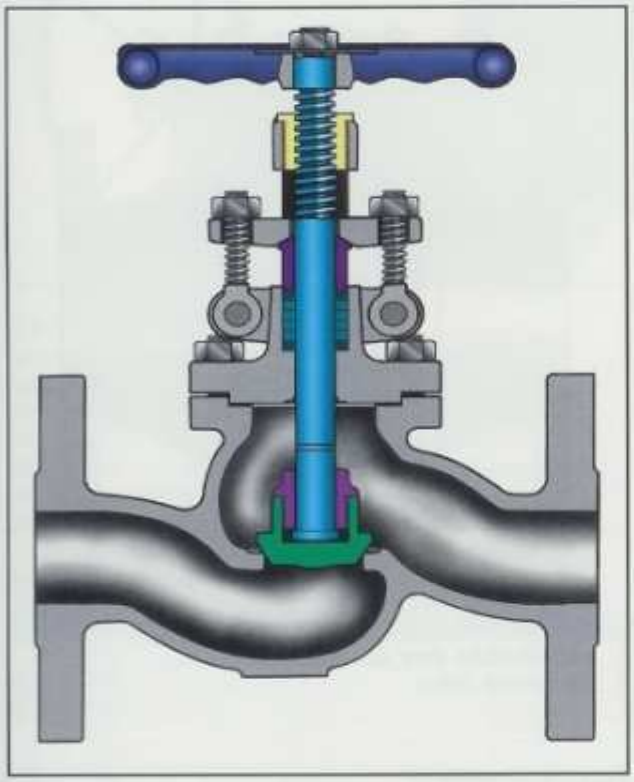

STANDARD MATERIALS

PART		MATERIAL
Body		A 351 Gr. CF8M
Bonnet		A 351 Gr. CF8M
Disc		A 351 Gr. CF8M
Stem		Gr. 316
Disc nut		A 351 Gr. CF8M
Gland pin		Gr. 316
Gland		Gr. 316
Gland flange		A 351 Gr. CF8M
Yoke bushing		Austenitic ductile iron Gr. D-2C
Handwheel		Malleable iron
Handwheel nut		Carbon steel
Name plate		Stainless steel
Bonnet stud		Gr. B8M
Bonnet nut		Gr. 8M
Gland stud		Gr. 304
Gland nut		Gr. 8M
Gland packing	SX or SY GX or GY	PTFE Graphite
Gasket	SX or SY GX or GY	PTFE with stainless wire mesh Graphite with stainless steel foil

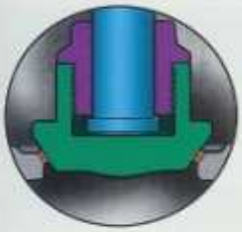

Optional integral Stellited seat face available for longer service life.

FIGURE NUMBERS

CLASS	FIGURE NUMBERS	
	STAINLESS SEAT	STELLITE SEAT
150	0074C–13SX or GX	0074C–13SY or GY
300	1074C–13SX or GX	1074C–13SY or GY

DIMENSIONS AND WEIGHTS

SIZE	FLANGED, ASME 150 (PN 20)					FLANGED, 0ASME 300 (PN 50)				
in mm	A	B	C	D	WEIGHT lb (kg)	A	B	C	D	WEIGHT lb (kg)
2 50	8.00 203	9.50 241	8.00 203	2.00 51	27 12.3	10.50 267	11.06 281	8.00 203	2.00 51	45 20.4
2½ 65	8.50 216	10.44 265	10.00 254	2.50 64	40 18.2	11.50 292	12.25 311	10.00 254	2.50 64	70 31.7
3 80	9.50 241	12.19 310	10.00 254	3.00 76	50 22.7	12.50 318	13.75 349	10.00 254	3.00 76	87 39.5
4 100	11.50 292	14.81 376	10.00 254	4.00 102	83 37.6	14.00 356	16.44 418	10.00 254	4.00 102	130 59.0
6 150	16.00 406	19.19 487	10.00 254	6.00 152	154 69.9	17.50 445	21.38 543	14.00 356	6.00 152	252 114.3

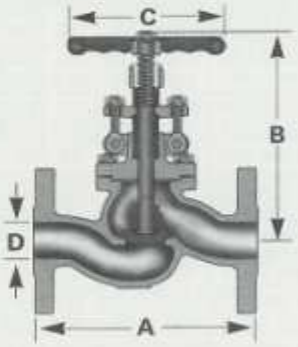

B = Center to Top, Open

VELAN

CAST STAINLESS STEEL SWING CHECK VALVES API 603 INTEGRAL SEAT, 2–12" (50–300 mm)

FLANGED, ASME CLASSES 150, 300, WALL THICKNESS TO B16.34

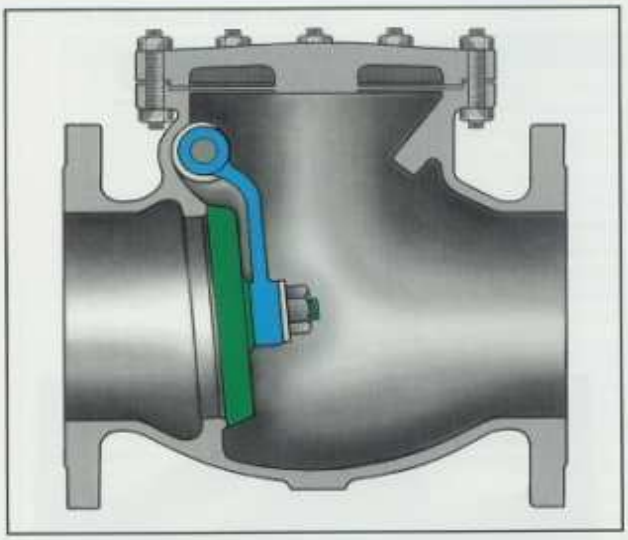

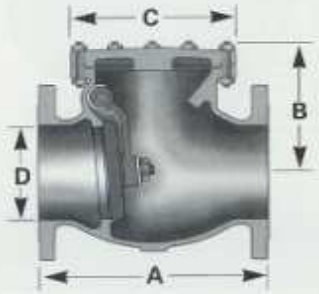

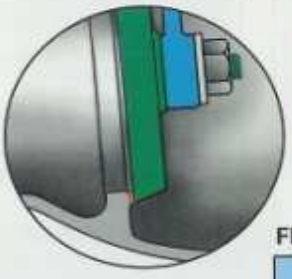

Optional integral Stellited seat face available for longer service life.

DIMENSIONS AND WEIGHTS

SIZE	FLANGED, ASME 150 (PN 20)					FLANGED, ASME 300 (PN 50)				
in mm	A	B	C	D	WEIGHT lb (kg)	A	B	C	D	WEIGHT lb (kg)
2 50	8.00 203	4.00 102	4.00[1] 102	2.00 51	21 9.5	10.50 267	4.75 121	5.00[1] 127	2.00 51	42 19.1
2½ 65	8.50 216	4.50 114	5.50 140	2.50 64	30 13.6	11.50 292	5.50 140	6.50 165	2.50 64	62 28.2
3 80	9.50 241	5.00 127	6.75 172	3.00 76	43 19.5	12.50 318	6.25 159	8.00 203	3.00 76	80 36.4
4 100	11.50 292	5.75 146	8.00 203	4.00 102	68 30.9	14.00 356	7.00 178	9.00 229	4.00 102	118 53.6
6 150	14.00 356	7.56 192	10.00 254	6.00 152	128 58.2	17.50 445	8.63 219	11.00 279	6.00 152	212 96.4
8 200	19.50 495	9.50 241	13.25 337	8.00 203	226 102.7	21.00 533	10.63 270	13.00 330	8.00 203	330 150.0
10 250	24.50 622	10.75 273	16.00 406	10.00 254	317 143.8	24.50 622	12.00 305	17.00 432	10.00 254	528 240.0
12 300	27.50 699	13.00 330	19.00 482	12.00 305	530 240.9	28.00 711	15.00 381	20.00 508	12.00 305	802 364

(1) Square.

FIGURE NUMBERS

CLASS	FIGURE NUMBERS	
	STAINLESS SEAT	STELLITE SEAT
150	0114C–13SX or GX	0114C–13SY or GY
300	1114C–13SX or GX	1114C–13SY or GY

STANDARD MATERIALS

PART		MATERIAL
Body		A 351 Gr. CF8M
Cover		A 351 Gr. CF8M
Disc		A 351 Gr. CF8M
Hinge		A 351 Gr. CF8M
Pin		Gr. 316
Plug		Gr. 316
Disc nut		Gr. 8M
Washer		Gr. 316
Cotter pin		Gr. 316
Cover stud		Gr. B8M
Cover nut		Gr. 8M
Gasket	SX or SY	PTFE with stainless wire mesh
	GX or GY	Graphite with stainless steel foil
Nameplate		Stainless steel