VELAN

MEMORY SEAL BALL VALVES

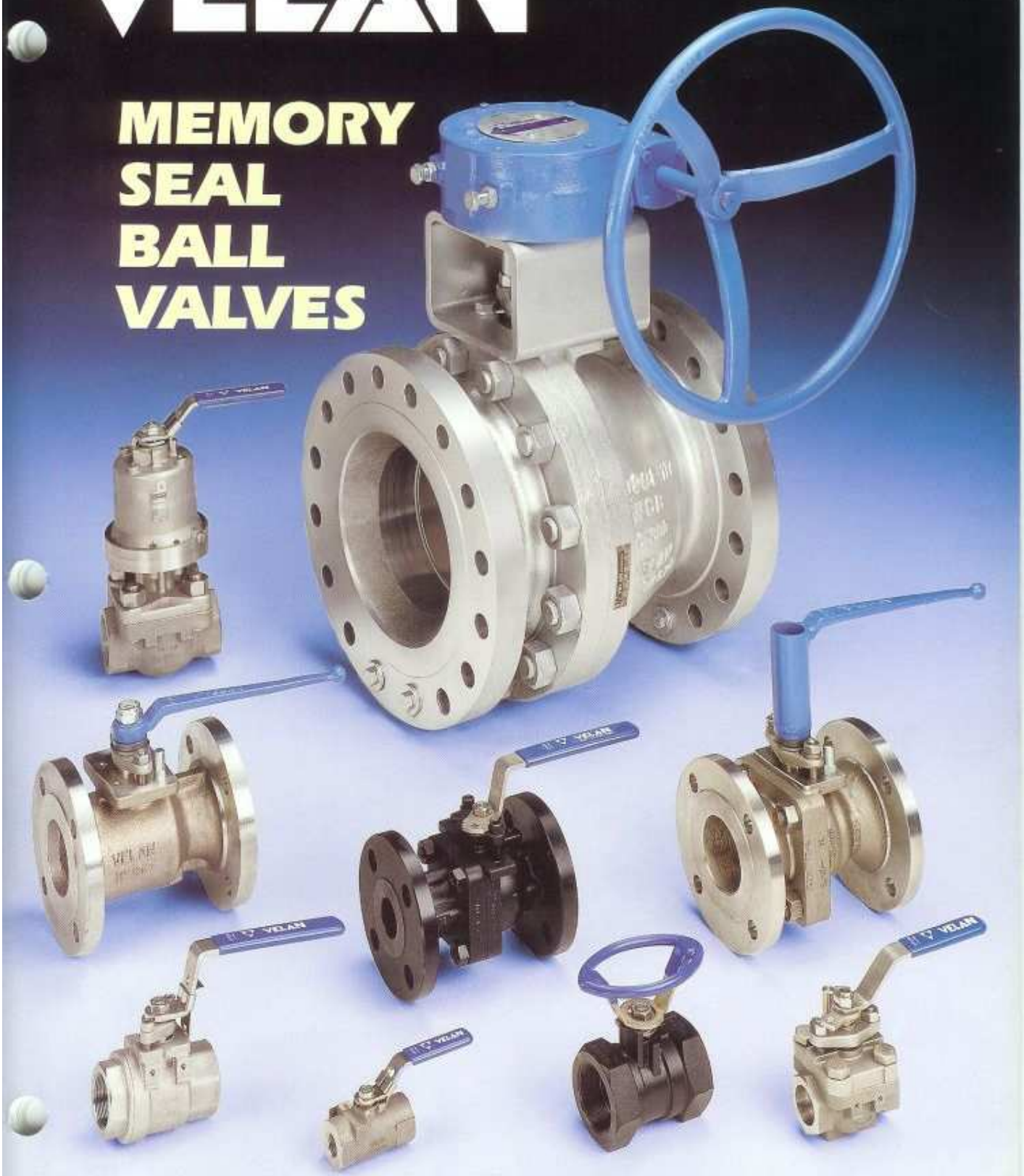

LOW FUGITIVE EMISSIONS 600–4000 WOG ASME CLASS 150–600 SIZES 1/4–24" (8–600 mm)

HIGH PERFORMANCE MEMORY SEAL BALL VALVES

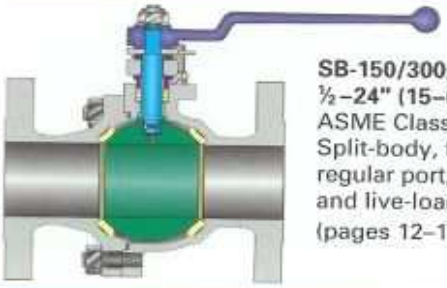

SB-150/300/600,
½–24" (15–600 mm)
ASME Class 150/300/600
Split-body, flanged
regular port, full port,
and live-loaded.
(pages 12–17)

RATING	psi	°F	bar	°C
ASME Class 150	285 100	100 450	20 7	38 232
ASME Class 300	740 100	100 450	51 7	38 232
ASME Class 600	1480 100	100 450	102 7	38 232
Steam 150[2]	150	366	10	186
Steam 250[2]	250	406	17	208

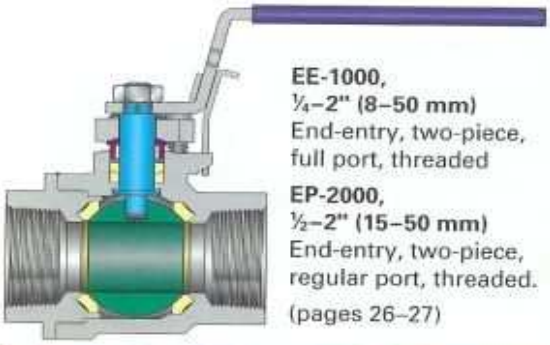

EE-1000,
¼–2" (8–50 mm)
End-entry, two-piece,
full port, threaded

EP-2000,
½–2" (15–50 mm)
End-entry, two-piece,
regular port, threaded.
(pages 26–27)

RATING	psi	°F	bar	°C
EE-1000 1000/1500 WOG	1500[3] 100	100 450	103 7	38 232
EP-2000 1500/2000 WOG	2000[3] 100	100 450	138 7	38 232
Steam EE-1000/EP-2000	150[2]	366	10	186

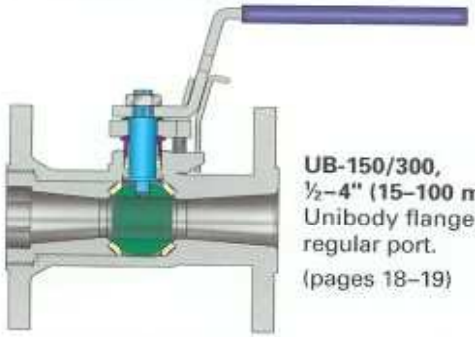

UB-150/300,
½–4" (15–100 mm)
Unibody flanged
regular port.
(pages 18–19)

RATING	psi	°F	bar	°C
ASME Class 150	285 100	100 450	20 7	38 232
ASME Class 300	740 100	100 450	51 7	38 232
Steam 150	150	366	10	186

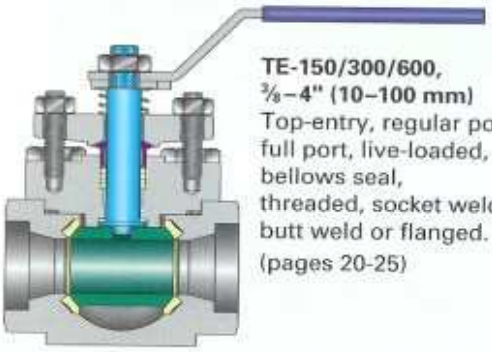

TE-150/300/600,
⅜–4" (10–100 mm)
Top-entry, regular port,
full port, live-loaded,
bellows seal,
threaded, socket weld,
butt weld or flanged.
(pages 20-25)

RATING	psi	°F	bar	°C
1480 WOG	1480[3] 100	100 450	102 7	38 232
Steam 250[2]	250	406	17	208
Steam 450[2]	450	456	31	235

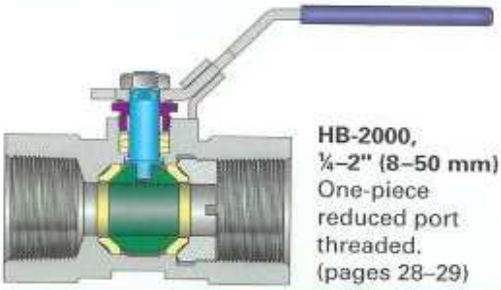

HB-2000,
¼–2" (8–50 mm)
One-piece
reduced port
threaded.
(pages 28–29)

RATING	psi	°F	bar	°C
2000 WOG	2000 100	100 450	138 7	38 232

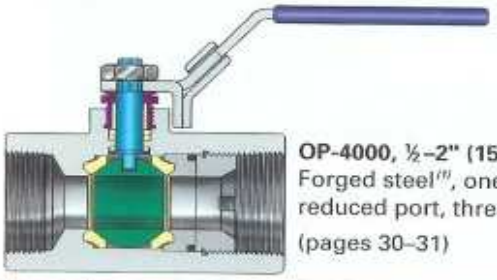

OP-4000, ½–2" (15–50 mm)
Forged steel[1], one-piece
reduced port, threaded.
(pages 30–31)

RATING		psi	°F	bar	°C
4000 WOG	Nylatron	4000	180	276	82
	Torlon	4000	180	276	82
	RPTFE	2000	100	138	38

Slurry valves, page 32.

NOTE: *Pressure–temperature ratings shown are for valves with RPTFE seats unless otherwise indicated.*
(1) SS valves - CF8M investment cast.
(2) See page 34 for material selection.
(3) Consult product pages for pressure–temperature rating details.

A COMPREHENSIVE BALL VALVE LINE TO HANDLE A WIDE VARIETY OF LIQUIDS AND GASES AT LOW, MEDIUM AND HIGH PRESSURES

Installation of 6" SB-150 at a Texas refinery.

All Velan ball valves can be equipped with electric, pneumatic, hydraulic or gear actuators.

See pages 39 to 40 for actuator sizing, torque requirements and technical data.

For metal-seated ball valves, see special catalog VEL-MS.

DESIGN AND TESTING STANDARDS AND SPECIFICATIONS		
Pressure–temperature rating	Shell	ASME B16.34
	Valve	See seat materials (page 41)
Shell wall thickness	ASME B16.34	
Face-to-face	ASME B16.10	
Flange dimensions	ASME B16.5	
Materials (page 44)	ASTM	
Valve testing	API 598	
Fire safe testing	API 607, BS 6755 (1), Exes 3-14-1-2A	

(1) BS 6755 has replaced BS 5146.

MANUFACTURING PROGRAM										
SIZE in mm	TYPE	DESIGN	RATING(2) psi	END CONNECTION	PORT	MATERIAL				PAGE
						CS	316	MO	ALLOY 20	
½–24 15–600	SB-150	Split-body	ASME Class 150	FLG	Full	✔	✔	✔	✔	12–13
½–24 15–600	SB-300	Split-body	ASME Class 300	FLG	Full	✔	✔	✔	✔	12–13
2–12 50–300	SB-600	Split-body	ASME Class 600	FLG	Full	✔	✔			12–13
2–24 50–600	SB-150	Split-body	ASME Class 150	FLG	Regular	✔	✔	✔	✔	14–15
2–24 50–600	SB-300	Split-body	ASME Class 300	FLG	Regular	✔	✔	✔	✔	14–15
2–12 50–300	SB-600	Split-body	ASME Class 600	FLG	Regular	✔	✔			14–15
½–4 15–100	UB-150	Unibody	ASME Class 150	FLG	Regular	✔	✔			18–19
½–4 15–100	UB-300	Unibody	ASME Class 300	FLG	Regular	✔	✔			18–19
⅜–3 10–80	TE-150/300/600	Top-entry	1480	NPT, SW BW, FLG	Full	✔	✔	✔	✔	20–25
½–4 15–100	TE-150/300/600	Top-entry	1480	NPT, SW BW, FLG	Regular	✔	✔	✔	✔	20–25
¼–2 8–50	EE-1000	End-entry two-Piece	1000/1500	NPT	Full		✔			26–27
½–2 15–50	EP-2000	End-entry two-piece	1500/2000	NPT	Regular	✔	✔			26–27
¼–2 8–50	HB-2000	Bar Stock one-piece	2000	NPT	Reduced	✔	✔		✔	28–29
½–2 15–50	OP-4000	Forged one-piece	4000	NPT	Reduced	✔	✔			30–31
½–2 15–50	EE-1500	End-entry two-piece	1500	NPT	Regular	✔	✔			32

(2) See pressure-temperature charts on product pages for details.

VELAN MEMORY SEAL BALL VALVE TECHNOLOGY

BEFORE ASSEMBLY

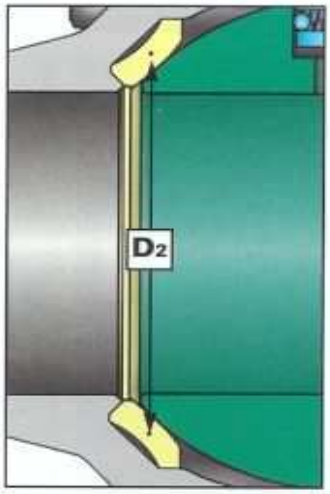

AFTER ASSEMBLY

Velan concave-convex flexible "in-tension" seats with induced sealing memory

U. S. PATENT 3,384,341

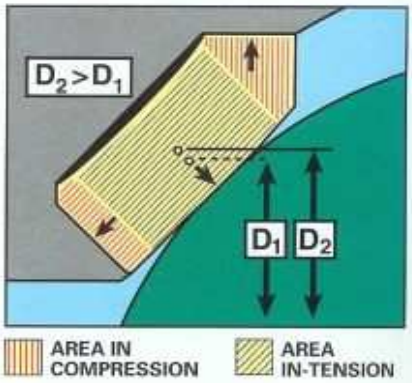

SEALING MEMORY

The Velan sealing memory is induced into the seats during the assembly process. When the ball is inserted into the valve body during assembly, it partially flattens the seat, creating a tensile stress in the center of the seat.

As a result, the seat core increases in diameter from D_1 to D_2 and like a stretched elastic band pushes against the ball. This ensures reliable sealing even at vacuum or low pressures.

SEAT STRENGTH

A seat in tension is stronger than a seat in compression because the tensile strength of PTFE in tension is 3600 psi versus only 1800 psi for PTFE in compression. Greater strength means less fatigue, superior sealing ability and longer cycle life.

LOWER TORQUES

Velan "in-tension" seats produce more uniform torque because the seat deflects into the cavity behind it to accommodate slight differences in machining tolerances or the normal expansion of PTFE as temperature increases. PTFE expands approximately seven times as much as metal.

SUMMARY OF MEMORY SEAL BENEFITS

- ***SEATS "IN-TENSION"***
  - ***Greater strength***
  - ***Less fatigue***
  - ***Positive bi-directional shutoff***
  - ***Compensate for temperature fluctuations***
  - ***Uniform torque***
  - ***High cycle life***
  - ***Eliminate cold flow effects***
- ***LARGER SEATING AREA***
  - ***Superior sealing***
- ***SELF-RELIEVING SEATS***
  - ***For self-relieving applications, we supply special self-relieving seats or drill a hole in the ball. The drilled bore is a preferential solution for cryogenic applications.***

COMPETING DESIGNS

VELAN IN-TENSION FLEXIBLE SEAT

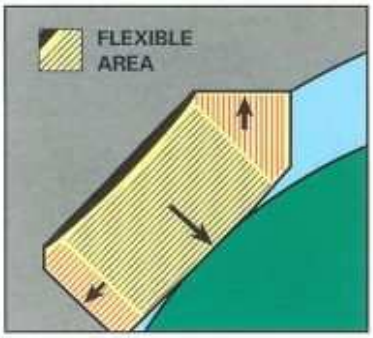

- ✔ Larger.
- ✔ Large flexible area.
- ✔ Seat in tension for longer cycle life (3600 psi strength for PTFE).
- ✔ Tight on low pressure service.
- ✔ Better resistance for shocks and high Δ P.

The competing seat design illustrations shown on this page are general in nature and are not intended to show the exact design or performance of any specific manufacturer.

COMPETITIVE FLEXIBLE SEAT

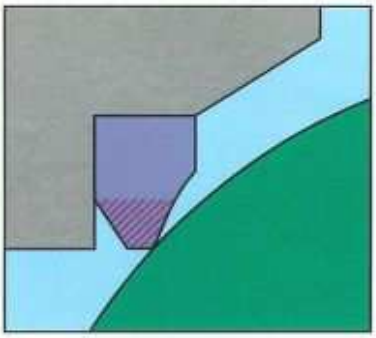

- ✘ Smaller.
- ✘ Small flexible area.
- ✘ Seat in compression results in diminishing flexing ability (1800 psi strength).
- ✘ Can leak in low pressure service.
- ✘ Solids can build up in between seat lip and body, reducing flexibility.

After assembly the seat diameter D_1, does not increase.

Seat contact is in ***compression not tension.***

BEFORE ASSEMBLY

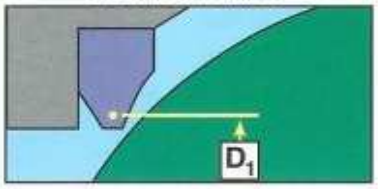

AFTER ASSEMBLY

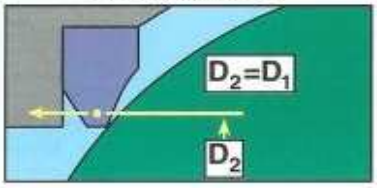

NON FLEXIBLE JAM SEAT

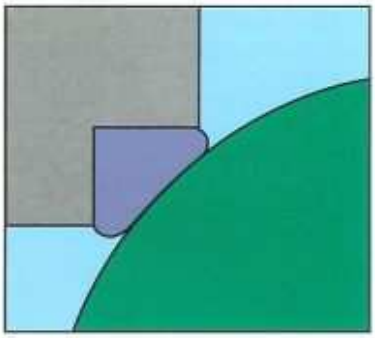

- ✘ Susceptible to cold flow.
- ✘ No flexibility. Variations in manufacturing tolerances cause torque variation.
- ✘ Does not compensate for temperature and pressure changes.
- ✘ Seats in compression (only 1800 psi strength).
- ✘ Low cycle life.
- ✘ Can leak in low pressure service.

BEFORE ASSEMBLY

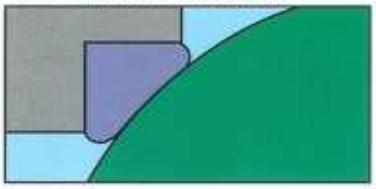

AFTER ASSEMBLY

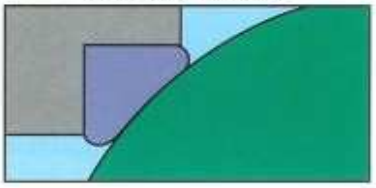

A UNIQUE PACKING CHAMBER TESTED FOR 0 PPM EMISSIONS WITH A FULLY GUIDED STEM AND FLANGED PACKING GLAND

1. **Fully-guided stem.** Stem bearings in body or cover and in the gland follower prevent wobbling and packing leakage due to side thrust on stem.

2. **Flanged gland design** for low fugitive emissions standard on all split-body, top-entry, unibody and EP-2000 valves.

3. **Low emission stem seal.** Precompressed (2000 psi) solid PTFE packing rings, a two-piece flanged gland and fine finish of stem and I.D. of packing chamber provides 0-20 ppm tightness for low emissions.

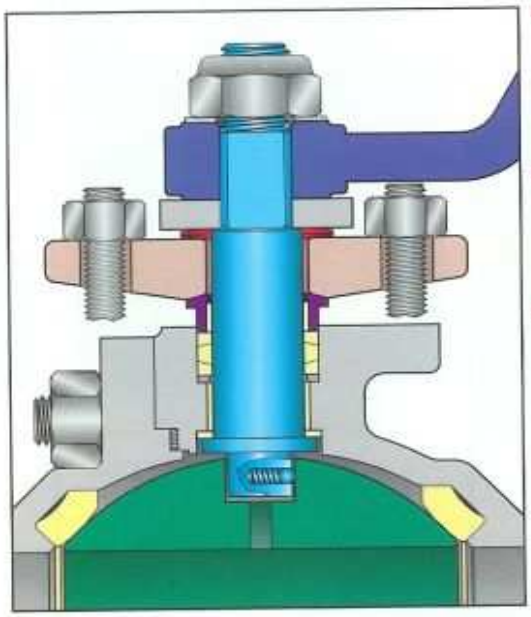

4. **Stem thrust washer** prevents galling, reduces operating torque and provides a secondary stem seal.

5. **Blowout-proof.** The internally-backseated stem provides blowout-proof safety.

6. **Antistatic devices.** The stem is grounded against body by contact with Belleville washers or coil springs. A separate device grounds stem against the ball for 2–24" split-body valves.

ALTERNATIVE STEM & PACKING CHAMBER DESIGNS

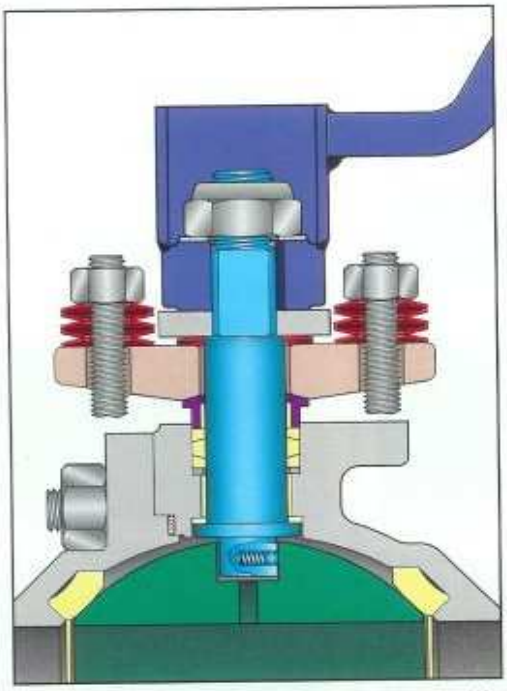

Live-loaded flanged gland for long cycle life (pages 16 and 22).

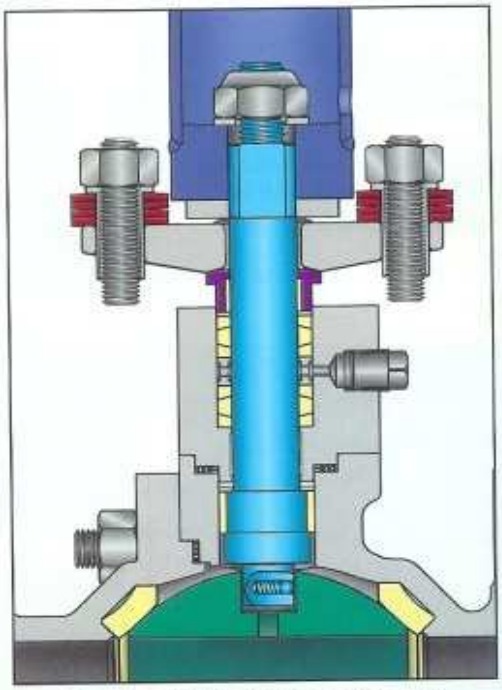

Live-loaded, double packed with leak-off/monitoring/purge/port (page 16).

BODY SEAL DESIGNS

Velan utilizes the most up to date materials and designs for body sealing. Spiral wound SS 316 /Graphite seals which comply with basic design requirements for those types of seals, are standard on all split-body and top-entry valves. The end-entry, unibody and one-piece valves have solid PTFE seals, while the one-piece "OP-4000" utilizes a Viton o-ring.

SPLIT-BODY
SB-150/300/600

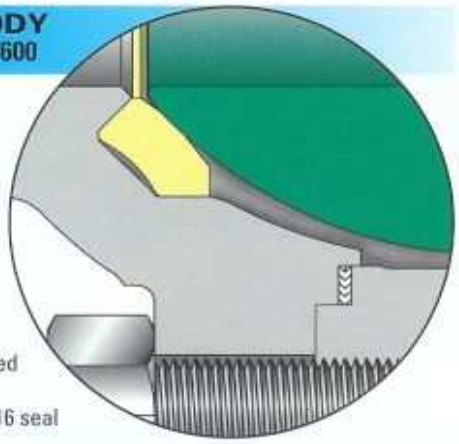

Totally enclosed Spiral Wound Graphite/SS 316 seal

TOP-ENTRY
TE-150/300/600

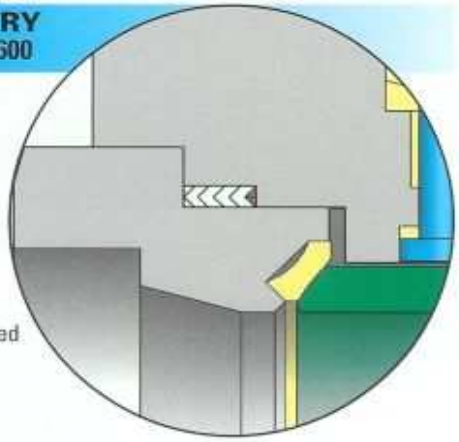

Totally enclosed Spiral Wound Graphite/316 cover gasket

UNIBODY
UB-150/300

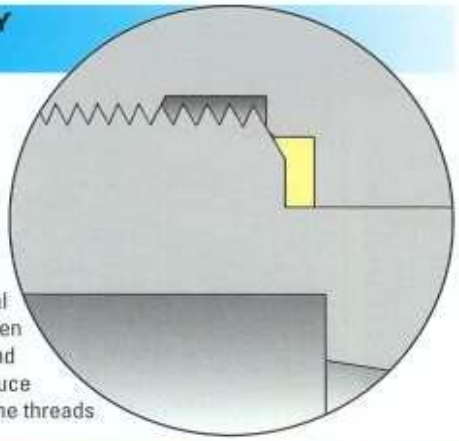

Solid PTFE seal located between the process and threads to reduce corrosion on the threads

END-ENTRY
EP-2000

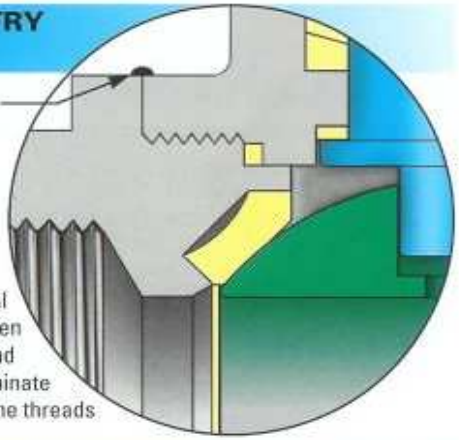

Solid PTFE seal located between the process and threads to eliminate corrosion on the threads

ONE-PIECE
OP-4000

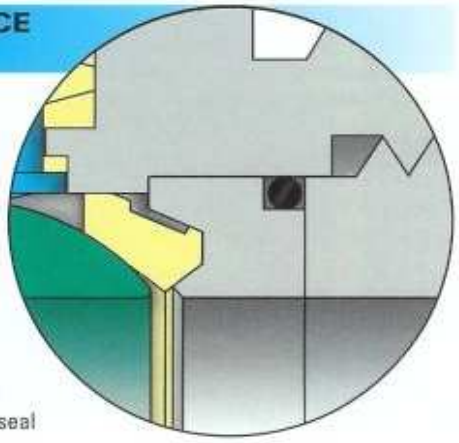

Fully enclosed Viton retainer seal

ONE-PIECE
HB-2000

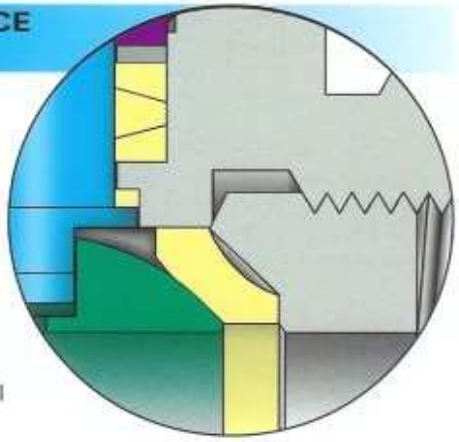

Metal-to-metal sealing

VELAN NOW OFFERS STANDARD BALL VALVES QUALIFICATION TESTED FOR "0" PPM EMISSIONS

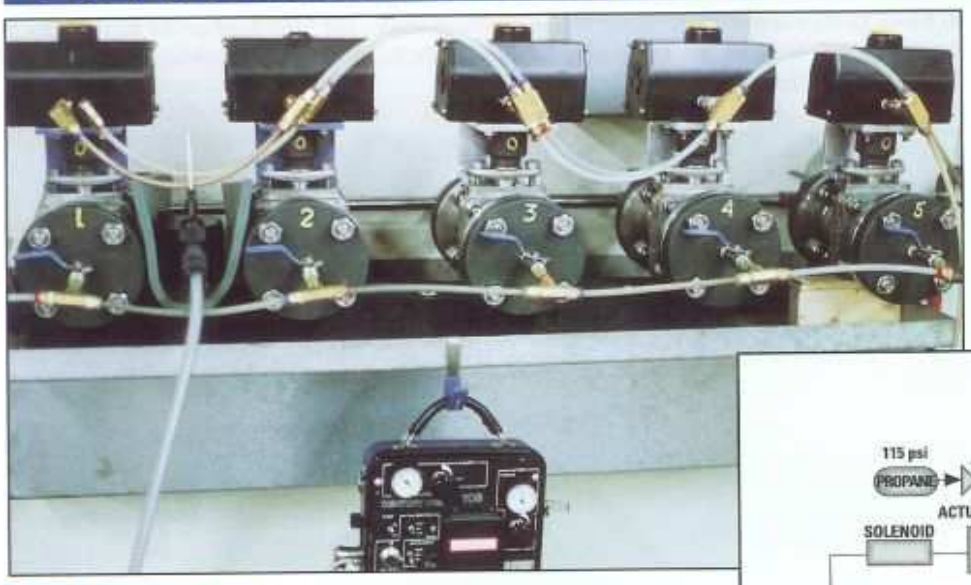

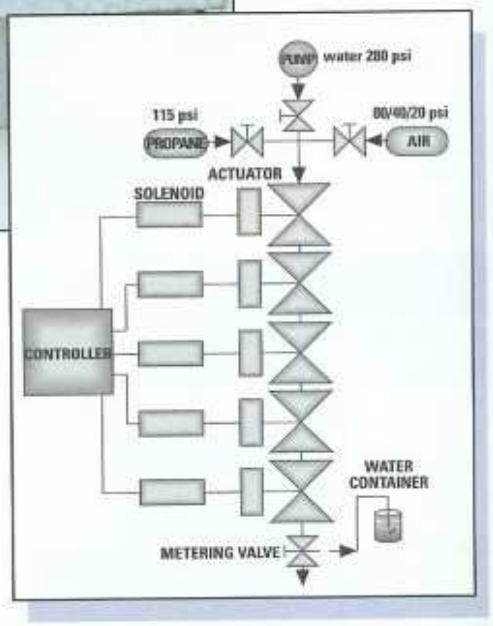

TEST PROCEDURE:

The purpose of cycle testing was to determine cycle life for 0 ppm tightness of stem seal and body gasket with propane at 115, 740 or 1400 psi for Classes 150, 300 or 600, and seat tightness to API 598 with water and gas at various pressures.

The testing consists of:

- Precycling evaluation.
- Gland and body gasket emissions measured every 500 cycles.
- Seat leakage to API 598 measured every 500 cycles.
- Seat wear measured every 1000 cycles.

TEST RESULTS:

0 ppm tightness during tests shown above.
Definition of 0 ppm is no detectable leakage registered on our organic vapor analyzer which has a range of 1–10,000 ppm.

COMPARISON TO API 598 TEST

API 598 test standard requires no visible external leakage (gasket, packing chamber and casting). The organic vapor analyzer measures leakage in parts per million (ppm). "Visible leakage" in API 598 is one drop of liquid per minute which we estimate is equivalent to about 2,400 ppm of gas. The API 598 test does not invoke cycling while we have tested valves up to 500,000 cycles in our research laboratory.

TA-LUFT QUALIFICATION

The certificate issued by RWTUV after testing Velan memory ball valves states "We herewith certify the equivalence of shaft sealing for Velan ball valves with a fully guided shaft and live-loaded flanged packing gland to stem sealing with bellows seal and additional safety packing". This is based upon the requirements described in TA-Luft, Section 3.1.8.4.

LOW FUGITIVE EMISSIONS

Based on extensive laboratory tests and field experience, Velan guarantees the customer that standard Velan ball valves will provide low emission service, on gaskets, and stem seals, under normal operating conditions, provided that gland and body-bonnet bolting is torqued to minimum values shown in the current Velan maintenance manuals. Maximum emissions on new valves: 20 ppm – PTFE packing rings and 100 ppm graphite packing rings.

A UNIQUE PACKING CHAMBER WITH A FULLY GUIDED STEM AND FLANGED PACKING GLAND TESTED FOR 0 PPM EMISSIONS

1. **Fully-guided stem.** Stem bearings in cover and in the gland follower prevent wobbling and packing leakage due to side thrust on stem.
2. **Flanged gland design** for low fugitive emissions.
3. **Low emission stem seal.** Precompressed (2000 psi) solid PTFE packing rings, a two-piece flanged gland and fine finish of stem and I.D. of packing chamber provides 0-20 ppm tightness for low emissions.
4. **Stem thrust washer** prevents galling, reduces operating torque and provides a secondary stem seal.
5. **Blowout-proof.** The internally-backseated stem provides blowout-proof safety.

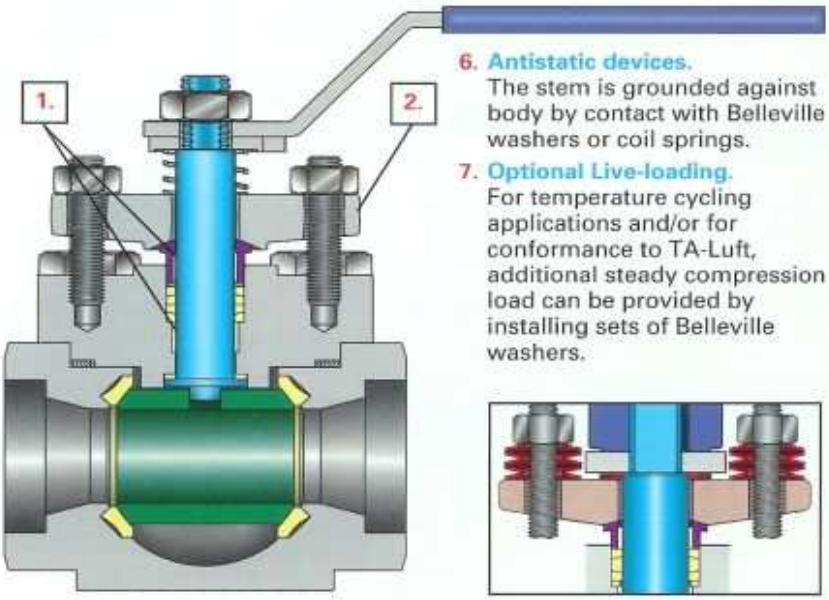

6. **Antistatic devices.** The stem is grounded against body by contact with Belleville washers or coil springs.
7. **Optional Live-loading.** For temperature cycling applications and/or for conformance to TA-Luft, additional steady compression load can be provided by installing sets of Belleville washers.

VELAN NOW OFFERS STANDARD BALL VALVES QUALIFICATION TESTED FOR "0" PPM EMISSIONS

TEST PROCEDURE

The purpose of cycle testing was to determine cycle life for 0 ppm tightness of stem seal and body gasket with propane at 115 psi, 740 psi and 1400 psi.

The testing consists of:

- Precycling evaluation.
- Gland and body gasket emissions measured every 500 cycles.
- Tested to 100,000 cycles; 500,000 cycles with live-loaded packing.

TEST RESULTS

0 ppm tightness during tests shown above. *Definition of 0 ppm is no detectable leakage registered on our organic vapor analyzer which has a range of 1–10,000 ppm.*

Top-entry, TE-600 with live-loading cycled for 500,000 with 0 ppm emissions.

ALTERNATIVE STEM & PACKING CHAMBER DESIGNS

0 PPM FUGITIVE EMISSIONS

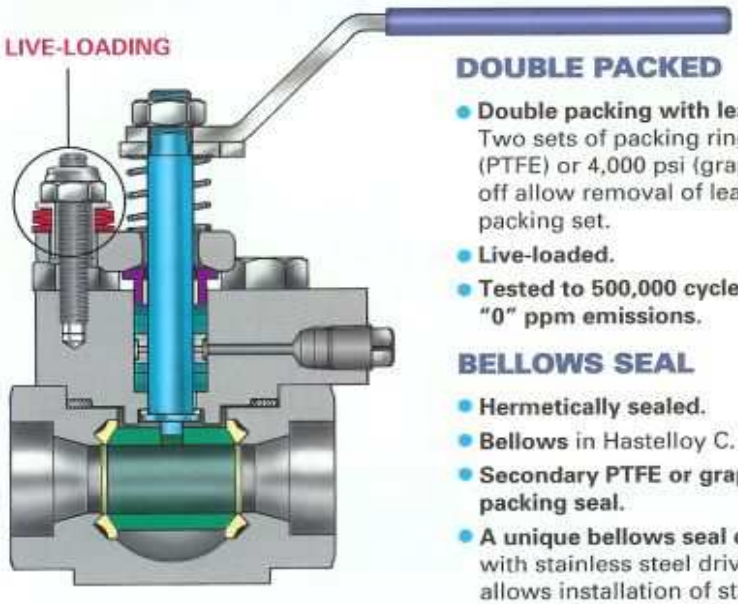

DOUBLE PACKED

- **Double packing with leak-off.** Two sets of packing rings, precompressed to 2,000 psi (PTFE) or 4,000 psi (graphite). A lantern ring and leak-off allow removal of leakage, if any, from bottom packing set.
- **Live-loaded.**
- **Tested to 500,000 cycles with "0" ppm emissions.**

BELLOWS SEAL

- **Hermetically sealed.**
- **Bellows** in Hastelloy C.
- **Secondary PTFE or graphite packing seal.**
- **A unique bellows seal design** with stainless steel driver unit allows installation of standard, pneumatic or electric actuator.
- **Tested to 100,000 cycles** with "0" ppm emissions.

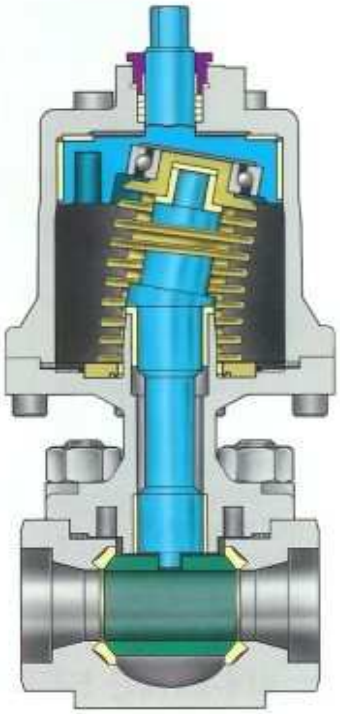

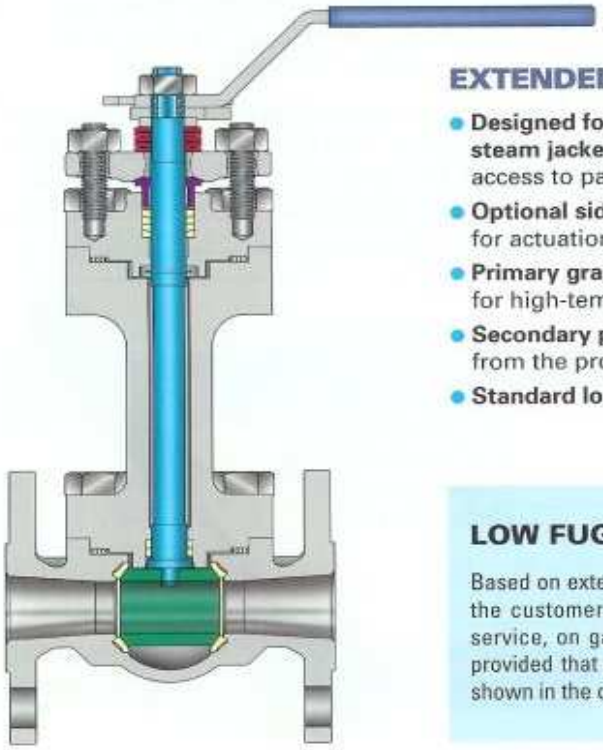

EXTENDED BONNET

- **Designed for insulated and steam jacketed lines** where access to packing is required.
- **Optional side mounting holes** for actuation.
- **Primary graphite packing** for high-temperature service.
- **Secondary packing** is isolated from the process.
- **Standard locking device.**

LOW FUGITIVE EMISSIONS

Based on extensive laboratory tests and field experience, Velan guarantees the customer that standard Velan ball valves will provide low-emission service, on gaskets, and stem seals, under normal operating conditions, provided that gland and body-bonnet bolting is torqued to minimum values shown in the current Velan maintenance manuals (see pages 8 and 43).

VELAN SPECIAL SERVICES

SELECTION TABLE, MATERIALS AND TRIM FOR VELAN BALL VALVES FOR STEAM SERVICE

ON-OFF STEAM SERVICE

Steam and a mixture of steam and condensate containing dissolved gases like carbon dioxide and oxygen are more corrosive than water. High velocity during cycling can damage valve parts – especially resilient seats. Bronze bodies are also subject to corrosion by alkaline "carry-over" of boiler water or free ammonia. Valve materials must be carefully selected.

ADDITIONAL DESIGN FEATURES

All balls are provided with a ⅛" hole drilled into the T-slot to prevent excessive pressure build-up in the cavity from trapped liquid when the valve is in the open position. Special handles are available to meet safety and insulation requirements (see page 38).

APPLICATIONS:

Trap lines, condensate drains, steam tracing lines, steam cleaning machines, laundry units, sterilizers, kettles, boiler shutoff and blowdown, cold/hot water lines, heating coils, steam-jacketing systems, paper machines, vulcanizing equipment, boiler feedwater, drip legs, bypass lines, etc.

All carbon and stainless steel valves with standard trim can be used for steam service. For pressure limitations, see the table below.

SELECTION TABLE
MATERIALS AND TRIM FOR STEAM SERVICE

Steam(1)	Type & Size(2)	Seat	Packing
50 psig	All up to 3"	PTFE	PTFE
150 psig	All	RPTFE	PTFE
250 psig	SB-300/600	C-RPTFE	Graphite
	TE-300/600	RPTFE	
450 psig	TE-300/600 ½–4"	C-RPTFE	Graphite
500 psig	TE-300/600 ½–4"	PEEK	Graphite

(1) Saturated steam, on/off operation.
(2) Consult ASME B 16.34 for body pressure-temperature rating.

THROTTLING SERVICE CONTROL VALVES

HOW IT WORKS:

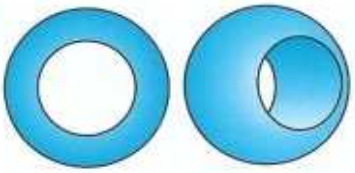

1. In the fully open position there is no obstruction to flow. The maximum Cv shown on the product pages are substantially larger than any other throttling valve. Half size pipeline valves can be used.

2. When throttling, the pressure drop is distributed over two orifices reducing the velocity and erosion effect and improving the flow pattern on low flow.

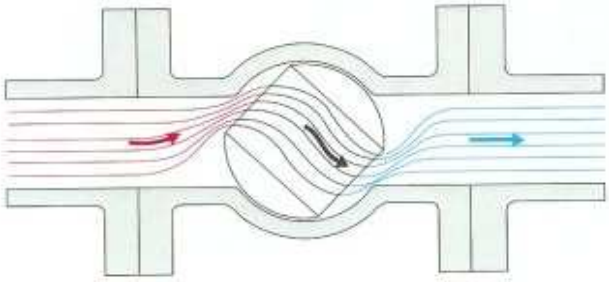

3. The ball valve has an equal percentage flow characteristic as shown on the diagram, providing reliable throttling of gases and liquids within a 20–100% range. All styles of valves are suitable for manual throttling and can be equipped with special dials indicating the 20–100% throttling range. All can also be supplied with pneumatic actuators and positioners, electric actuators with electronic servo-amplifier or diaphragm actuators for automatic control.

FLOW DIAGRAM

VELAN SPECIAL SERVICES

VACUUM SERVICE

Standard ball valves can be used to 0.02 mm Hg or 20 micron at -50° to 400°F. For special high vacuum valves up to 0.01 micron at 0° to +300°F, please contact the factory.

RATING	psi	Hg.mm	Micron
LOW	0.485	25	—
STD VALVE	—	0.02	20
MEDIUM	—	0.001	1
HIGH	—	1×10^{-6}	1×10^{-3}
VERY HIGH	—	1×10^{-9}	1×10^{-6}

BALL VALVES FOR HIGH VACUUM SERVICE

A. DESIGN – PRODUCTION

1. Seats and seals must be PTFE.
2. All mating surfaces sprayed with PTFE.
3. Seats and balls individually selected for finish.
4. All metal parts vapor degreased.
5. Body seat surfaces lapped to 16–32 RMS.

B. TESTING:

Helium leak detector.

C. PACKAGING:

All valve ends sealed off.

CHLORINE SERVICE

Chlorine is extremely corrosive and toxic. Corrosion increases with the percentage of water moisture. Up to 50 parts per million or 0.005% water, chlorine is considered dry. Above this level, it is wet. The liquid gas curve of chlorine is shown in the diagram below. There is also danger due to a high coefficient of thermal expansion. When cold liquid chlorine is trapped in the non-expanding space of the ball valve cavity, high destructive pressures can develop.

Velan ball valves, factory ordered for chlorine service, are specially prepared to meet Chlorine Institute Pamphlet 6 requirements.

1. RELEASE OF CAVITY PRESSURE

Positive release to the upstream side is assured in bypassing the upstream seat through a drilled hole in the ball. These valves must be installed in one direction only. An arrow indicates the directional use of the valve. Self-relieving seats are also available.

2. STANDARD MATERIALS

BODY – A 105 or WCB carbon steel.
SEATS – RPTFE.
TRIM – Monel or Hastelloy C as per customer selection. Other materials are also available to customer specifications.

3. CLEANING

All parts are carefully cleaned and are black light tested to assure they are free of hydrocarbons, alcohol or moisture. Valves are dried after hydrotest and packed in plastic bags with a desiccant.

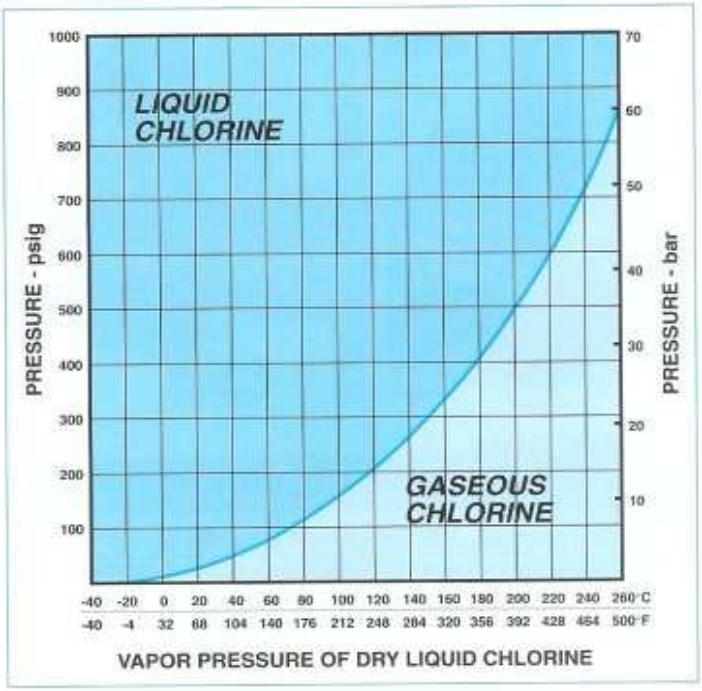

VELAN SPECIAL SERVICES

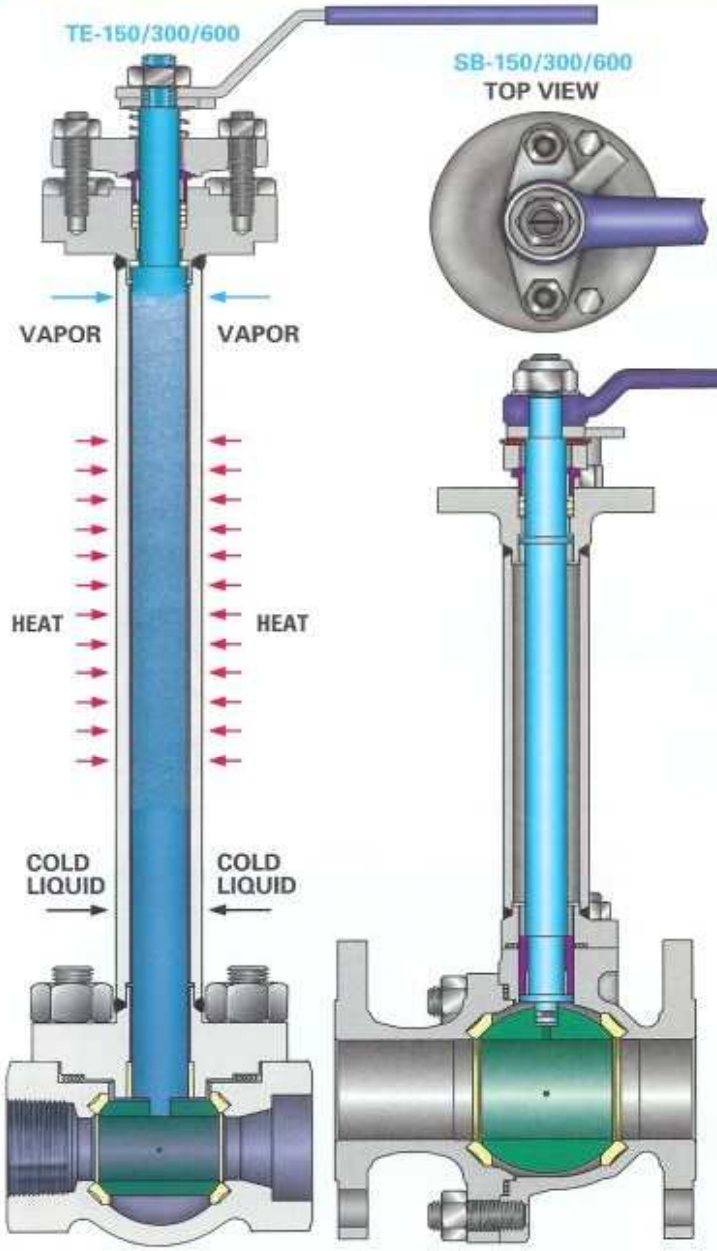

CRYOGENIC SERVICE

Valves to be used in cryogenic service have extended stems located in a sufficiently long tube to provide an insulating gas column above the cold fluid to prevent shrinkage of the stem packing.

NOTE: Cryogenic service valves are to be equipped with special seat designs.

The extension also allows for packing adjustments and maintenance when valves are installed in cold box service.

A ⅛" vent hole is provided in balls for cryogenic ball valves. Standard material for cryogenic service is austenitic stainless steel for all parts and bolting, offering excellent impact strength, minimizing heat loss and protecting against corrosion.

Extensions are usually specified by customers. Velan standard lengths for extensions are 12" (300 mm) for ½–2" (15–50 mm) valves and 14–18" (350–450 mm) for 2½–12" (65–300 mm) valves.

When welded, Inconel electrodes are used for all austenitic stainless steel valves.

TESTING:

Valves can be qualification tested at cryogenic temperatures with nitrogen or helium gas.

SPECIAL CLEANING:

All cryogenic valves are thoroughly degreased, cleaned, and pipe ends sealed to prevent contamination.

LIVE-LOADED BODY BOLTING (OPTIONAL):

For applications where rapid temperature fluctuations *(example: LNG loading platform)* can cause joint leakage, body-bonnet bolting is live-loaded with Belleville spring washers.

CRYOGENIC GASES

TYPE	BOILING POINT °C	BOILING POINT °F	LIQUID DENSITY (lb/ft³)	TYPE	BOILING POINT °C	BOILING POINT °F	LIQUID DENSITY (lb/ft³)
Natural Gas, LNG	-168	-270	26.0	Air	-194.40	-318	57.87
Methane, CH_4	-161.5	-258	26.2	Nitrogen, N_2	-195.80	-320	50.45
Oxygen, O_2	-182.9	-296	71.2	Hydrogen, H_2	-252.70	-423	4.43
Argon, Ar	-185.9	-303	87.4	Helium, He	-268.90	-452	7.82
Carbon Dioxide, CO_2	-78.5	-109	50.6	Absolute zero	-273.16	-460	–

VELAN SPECIAL SERVICES

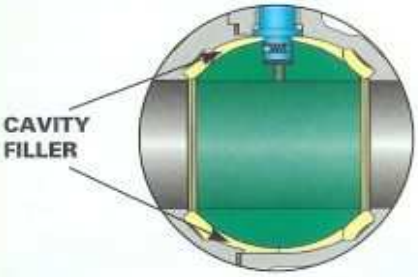

CAVITY FILLERS

PTFE cavity fillers are used to fill the void in the valve cavity between the body, ball and seats in SB-150 and SB-300 ball valves (2–8" (50–200 mm) regular port, ½–6" (15–150 mm) full port). These PTFE sleeves reduce the chances of residue particles contaminating multiple use lines. They are also used in slurry services and processes which could solidify if left in a closed valve body.

Cavity fillers are an option identified by using the letter "F" in the last position of the figure number (see page 45).

SOUR GAS SERVICE

All Velan valves meet the material requirements of NACE MR0175 when required.

NON-EXPOSED SERVICE: Velan ball valves are manufactured according to NACE where the bolting is not directly exposed to sour environments and is not to be buried, insulated, equipped with flange protectors, or otherwise denied direct atmospheric exposure shall be specified as shown in the chart below.

EXPOSED SERVICE: Velan ball valves are manufactured according to NACE where components and bolting will be directly exposed to the sour environments or that will be buried, insulated, equipped with flange protectors, or otherwise denied direct atmospheric exposure shall be specified as shown in the chart below.

STANDARD MATERIALS OF CONSTRUCTION FOR NACE SERVICE

Valve	Size	Body Cover and Body	Ball	Stem(1)	Gland Ring	Non-exposed Service(4)(5)	Exposed Service(4)	Body Bolting(3)	Gland Bolting(2)	Belleville Washers / Coil Springs
HB-2000	½–2"	CS Max. HRC 22 SS Max. HRC 22	A 351-CF8M A 351-CF8M	A 276-316 A 276-316	SS 304	"A"	"A"	N/A N/A	N/A N/A	SS 302
EE-1000	½–2"	SS Max. HRC 22	A 351-CF8M	A 276-316	SS 304	"A"	"A"	N/A	N/A	SS 410
EP-2000	½–2"	CS Max. HRC 22 SS Max. HRC 22	A 351-CF8M A 351-CF8M	A 276-316 A 276-316	SS 304(2)	"A"	"I"	N/A N/A	B7M B7M	SS 302
UB-150/300	½–2" 3–4"	CS Max. HRC 22 SS Max. HRC 22	A 351-CF8M A 351-CF8M	A 276-316 A 276-316	SS 304(2)	"A" "I"	"I" "I"	N/A N/A	B7M B7M	SS 302
SB-150/300	½–1½" 2–6" 8" FP & up 10" RP & up	CS Max. HRC 22 SS Max. HRC 22	A 351-CF8M A 351-CF8M	A 276-316 A 276-316	SS 304	"A" "I" "A" "A"	"I" "I" "I" "I"	B7M B7M	B7M B7M	SS 302
SB-600	2–12"	CS Max. HRC 22 SS Max. HRC 22	A 351-CF8M A 351-CF8M	A 276-316 A 276-316	SS 304	"A"	"I"	B7M B7M	B7M B7M	SS 302
TE-150/300/600	⅜–2" 3–4"	CS Max. HRC 22 SS Max. HRC 22	A 351-CF8M A 351-CF8M	A 276-316 A 276-316	SS 304	"A" "I"	"I" "I"	B7M B7M	B7M B7M	SS 302

(1) Valves with SS trim may have SS 316, 630 or XM-19 stems at manufacturer's option.
(2) On ½" and ¾" the gland is integral with the packing flange.
(3) Other bolting materials are available upon request.
(4) As required specify either "A" or "I" at end of figure number.
(5) Standard bolting as shown on the product pages.

NUCLEAR SERVICE

Velan holds ASME N-Certificate of authorization to manufacture nuclear valves and components in Classes I, II and III in its U.S. and Canadian plants. Strict quality control in all facets of procurement of material and production assures conformance to all ASME requirements for nuclear service.

HYDROGEN PEROXIDE

Valves are supplied in SS 316 to resist attack by hydrogen peroxide. Special passivation is available, if requested. All balls must be drilled to relieve trapped hydrogen peroxide which may build up pressure in the valve cavity. Valves must be internally cleaned like for oxygen or chlorine service.

SIZING OF ACTUATORS

ELEMENTS AFFECTING THE VALVE TORQUE

The torque requirements of soft seated ball valves depend on many factors:

VALVE DESIGN AND MATERIAL SELECTION

- **Seat design and material selection**
  Velan patented seats were developed to ensure maximum flexibility and low torque. The friction force depends on the seat material, and the applicable torque multipliers are shown in the seat selection table on **page 41**.
- **Ball – free floating or trunnion mounted?**
  A free floating ball is forced against the downstream seat by the fluid pressure and the resulting torque is a product of the friction force and the seat/ball contact radius. The fluid load is carried by the bearings in a trunnion mounted ball valve, resulting in an overall lower torque.
- **Stem seal**
  The torque resulting from the stem packing friction depends on the packing chamber depth and selection of materials. This factor is important on small valves where it is relatively high in proportion.

SERVICE CONDITIONS

- **Differential pressure**
  The breakaway torque increases substantially with the differential pressure on larger ball valves. On small ball valves (up to 1"), where the stem packing friction is higher than the ball/seat torque, the overall torque remains approximately the same.
- **Frequency of operation**
  When a valve remains in the closed position for extended periods of time, the breakaway torque increases due to cold flow of the resilient material under contact pressure into the minute surface roughness of the ball.
- **Fluid influence**
  The torque tends to be lower with oils, but higher with gas or other liquids with solids or slurries. Dirt and solid particles can become embedded in the seats, which greatly increases the torque. The torque data on the product pages is the result of laboratory tests with clean water at ambient temperature.
- **Influence of temperature**
  In most cases, within the operating temperature range, the torque remains constant except at low cryogenic levels, when the seats become more rigid.
- **Limitation to speed of actuation**
  Resilient materials such as Virgin PTFE or reinforced (RPTFE) can be damaged by a fast turning ball under pressure. The speed limits for closing or opening the ball valves are: 0.5 seconds for valves ½–2½", 1 second for valves 3–6" and 5 seconds for valves 8–12".

TYPICAL EXAMPLES

FOR SIZING ACTUATORS BASED ON ACTUATOR TORQUING EQUATION

TO OBTAIN THE TORQUE REQUIREMENTS FOR A GIVEN ACTUATOR, PROCEED AS FOLLOWS:

STEP 1 Determine the basic, maximum torque **"TT"** for a particular valve and pressure differential from torque tables on the product pages.

STEP 2 Determine from **Table 3** the seat material factor **"MF"**. For PTFE or RPTFE, the factor is 1.0.

STEP 3 Determine from **Table 1** the fluid factor **"FF"**

STEP 4 Determine from **Table 2** the frequency of operation factor **"OF"**

STEP 5 Using the data from steps 1–4, the actuator torque equation **"AT"** can now be established:

AT = TT x MF x FF x OF lbf·in
(STEP 1) (STEP 2) (STEP 3) (STEP 4)

EXAMPLE 1

Application: Liquid oxygen evaporizer
Service: Clean, dry, oxygen gas. Differential pressure 60 psid.
Service temperature: 70°F
Cycle time: Every 6 hours
Valve size: SB 150 4", flanged in CF8M, full port.
Seat material: PTFE
Actuator: Pneumatic actuator with spring return, fail closed.
Air supply: 90 psig

SIZING OF TORQUE:

TT = 2000 lbf·in For ΔP = 60 psid,
MF = 1 (PTFE) (**Table 3**),
FF = 1.3 (**Table 1**), OF = 1 (**Table 2**)
Minimum Break Torque Required

AT = 2000 x 1 x 1.3 x 1 = 2600 lbf·in

SELECTION OF ACTUATOR:

In the above example 2600 lbf·in is the minimum required valve break torque or the minimum required actuator output torque. Since allowances for the fluid type, seat material and frequency of operation have already been incorporated into the required torque calculation additional safety factors are not required. However, it is good practice to apply an additional 1.5 multiplier to the break torque when selecting a pneumatic actuator. This will assure smooth operation and provide for occasional reduction of air pressure. This is sufficient data when constant torque type actuators such as rack and pinion double acting or electric actuators are used. However, when Scotch yoke type, spring return – fail closed or spring return - fail open actuators are used, factor the break torque by 0.70 for run torque and 0.80 for reseat torque.

CALCULATION OF THE ACTUATOR TORQUE REQUIREMENT

FLUID FACTOR "FF"

TABLE 1

LIQUID	FACTOR "FF"(1)
Clean particle-free, non-lubricating (e.g. water, alcohol or solvents)	1.0
Clean particle-free,lubricating oil	0.5 to 0.8
Slurry (liquids carrying solids) or heavy corroded and contaminated system	1.3 to 2.0
Gas or saturated steam, clean and wet	1.0
Gas or superheated steam, clean and dry	1.3
Gas, dirty E.G. natural gas	1.2 to 1.5

IMPORTANT NOTES:

1. When sizing an actuator for standard port valves, use torque data for a full bore valve, one size smaller. Regular port 2" = 1½" full bore.
2. Published factors are to be used as a guide.
3. The actuator selection has to be based also on economical considerations. A valve in a key position, having an important function, or one out of reach for service, should have a larger actuator than would normally be selected.

FREQUENCY OF OPERATION FACTOR "OF" TABLE 2

FREQUENCY	FACTOR "OF"(1)
Once per day or greater	1.0
Once per week or greater	1.3
Once per month or greater	1.4
Once per 4 months or greater	1.5

(1) The seat, fluid and frequency of operation factors should be considered as a guide only and should be adjusted according to experience and judgement. Velan is not responsible directly nor indirectly for actuator selection by third parties.

*For **"MF"FACTOR** see **TABLE 3** on page 41.*

BALL VALVES – MANUAL GEAR ACTUATORS

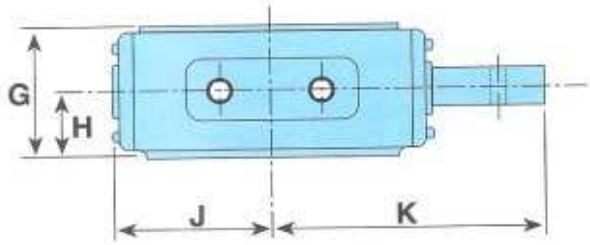

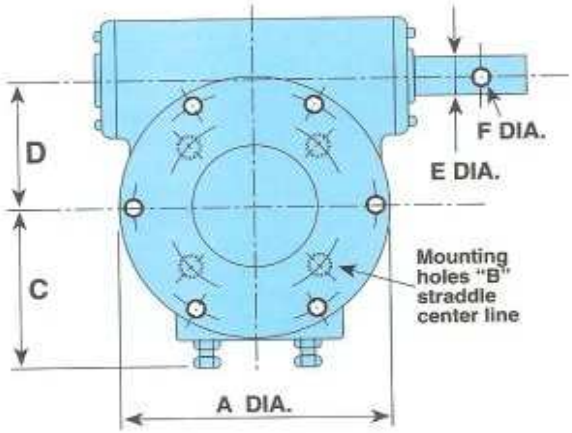

Velan recommends manual gear actuators on all 8–12" valves which are not equipped with air or electric actuators. They are used on 3–6" valves where operating space is too small for lever handles.

The actuators are fully enclosed and a pointer indicates the position of the ball.

Handle extensions, chain sprockets or right angle drives are available.

TORQUE RATINGS

UNIT	RATIO	MAXIMUM OUTPUT TORQUE		MAXIMUM SHAFT DIA.		WEIGHT		EFFICIENCY
	Basic	lbf in	Nm	in	mm	lb	kg	Basic
GO-2	30:1	4,800	542	1.437	36	22	10	0.25
GO-3	50:1	9,000	1,017	2.250	57	29	13	0.25
GO-4	80:1	21,000	2,373	3.250	83	70	32	0.25

DIMENSIONS

UNIT	A	B	C	D	E	F	G	H	J	K
GO-2	6.37	4 x ⅜ –16 UNC, 3¼" B.C.D.	4.00	2.50	0.75	0.18	3.50	1.50	3.18	8.00
GO-3	7.12	4 x ½–13 UNC, 5" B.C.D.	4.25	3.12	0.75	0.18	3.75	1.50	3.50	8.00
GO-4	10.00	4 x ¾ –10 UNC, 6.5" B.C.D.	5.75	4.50	1.00	0.25	4.50	2.25	5.18	9.81

SEAT MATERIAL SELECTION AND "MF" TABLE 3

SEAT FACTOR MF[1]	SEAT MATERIAL	APPLICATION AND LIMITATIONS				
		RANGE °F	CHEMICAL	RADIATION	TYPE OF VALVE	SERVICE APPLICATION
T 1.0	Virgin Polytetrafluoro-ethylene PTFE	-100[2] to +400	All except: -Molted alkali metals -Liquid or gaseous fluorine -Few fluoro-chemicals (i.e. CLF_3 and OF_2).	10^4 RAD	SB-150/300 UB-150/300 EE-1000 EE-1500 TE-150/300/600	Chemical and cryogenic service
G 1.0	Glass reinforced (15%) (RPTFE)	-100 to +450	Same as "T".	10^4 RAD	EE-1000 EP-2000 HB-2000 OP-4000 SB-150/300 UB-150/300 TE-150/300/600	Used as standard for low and medium pressure service for steam service up to 150 psig.
C 1.0	Carbon graphite reinforced Teflon (C-RPTFE)	-100[3] to +500	Same as "T" and "G" except for compatibility of fluid media with carbon.	10^4 RAD	SB-150/300 SB-600 TE-150/300/600	For high temperature and high pressure service. For steam up to 450 psig.
E 1.0	Modified Polytetrafluoro-ethylene (PTFE)	-100 to +450	Same as "T"	10^4 RAD	EP-2000 SB-150/300 TE-150/300/600	For low and medium pressure service . Is particulary recommended for use on styrene and butadiene.
M 3.0	Polyamide-Imide Torlon (PAI) (12% graphite, 3% PTFE)	-60 to 500	Attacked by HT caustic acid systems. Low resistance to hydrolysis. Not suitable for steam or hot water.	10^9 RAD	OP-4000	Best suited for high pressure and high temperature service.
N 2.0	Nylatron Polyamide (nylon) modified by molyb-denum disulphide	-30 (-5 dry) to +180	The material is not suited for service with strong oxidizing agents, strong mineral acids, formic acid, phenols, steam or boiling water (175°F max.).	5×10^6 RAD	OP-4000	Used as standard for high pressure and low temperature service.
K 2.0	PFA Perfluoroalkoxytetra-fluoroethylene	-60 to +440	All except: -Molted alkali metals -Liquid or gaseous fluorine -Few fluoro-chemicals (i.e. CLF_3 and OF_2).	2×10^6 RAD	SB-150/300/600 TE-150/300/600	For applications with polymeric monomers, for example styrene or butadiene.
P 2.0	PEEK Polyetheretherketon, reinforced by glass or graphite	-60 to +500	Strong acids and bases at high concentration and temperature will affect the material.	10^9 RAD	TE-150/300/600 SB-150/300	Best suited for high pressure and temperature service with steam in radiation environment.
U 1.3	UHMW-PE Ultra high molecular weight polyethylene	-60 to +200	At temperatures below 140°F the material is unaffected by a large number of solvents. It is attacked by aromatic and halogenated hydrocarbons and strong oxidizing agents (nitric acid, oleum and halogens).	10^7 RAD	SB-150/300/600 TE-150/300/600	Where high chemical resistance and abrasion resistance required.

1) The seat, fluid and frequency of operation factors should be considered as a guide only and should be adjusted according to experience and judgment. Velan is not responsible directly nor indirectly for actuator selection by third parties.

2) Down to -325°F for cryogenic service with special seats for Class 150/300. For temperatures below -100°F our cryogenic seat must be used. The standard seat is not to be used for these lower temperatures.

3) Down to -325°F for cryogenic service with special seats for Class 600. For temperatures below -100°F our cryogenic seat must be used. The standard seat is not to be used for these lower temperatures.

AUTOMATED VALVES

Velan ball valves are available in a variety of automation packages that include pneumatic, electric and hydraulic. Automation is done by either Velan at its own facilities located around the world or by authorized automation centers. In either case automation is done in accordance with strict guide lines of quality assurance, engineering standards and performance.

Velan automated ball valves have been supplied to the following:

- OIL REFINING
- PETROCHEMICAL
- POWER
- PULP & PAPER
- CHEMICAL
- PHARMACEUTICALS
- OIL & GAS

Part of a shipment for 260 Velan automated ball valves being shipped to a large chemical company.

Velan split-body automated ball valves (sizes ½–4" (15–100 mm) installed in a major chemical plant, in Ohio).

The flexibility of the Velan's automation program allows for the best actuation package and accessories to meet the customers needs regardless of the mix between performance and commercial requirements.

Velan maintains *"Specification for Valve Automation"* and *"Quarter Turn Actuation Standards"* documents. Only those automation centers that adhere to these standards and are approved by Velan audits earn the status of *"Authorized Velan Automation Center"*.

This program assures our customers that Velan ball valves are automated without compromise in performance while still maintaining the flexibility in choice of actuators and accessories. Regardless of whether the actuation is done at Velan or at an Authorized Automation Center.

All automated ball valves from Velan or Authorized Automation Centers carry a discrete serial number complete with data sheet on permanent file. This permanent record contains the source of supply and data on all components such as actuator, solenoid valves, limit switches, positioners. Also, all the test data such as operational test, seat leak test, etc. are recorded as well.

MATERIAL SPECIFICATIONS

SPECIFICATIONS FOR SEAT & SEAL MATERIALS

PROPERTIES (UNITS)	VIRGIN PTFE	FILLED PTFE		HIGH PRESSURE	
				TO 200°F	TO 450°F
		15% GLASS (RPTFE)	CARBON GRAPHITE (C-RPTFE)	NYLATRON	TORLON PEEK + 30% GLASS
Specific gravity (g/cc)	2.16	2.22	2.3	1.14-1.18	1.45 1.49
Tensile strength (psi) 73°F	4000	2800-3600	3.100	10,000-14,000	33,000 25,000
Modulus of elasticity (psi)	50,000-90,000	312,000	213,000	450,000-600,000	1,400,000 1,100,000
Compressive stress psig at 1% offset	1,000	1,000	1,025	12,000-13,000	45,000 30,000
Coefficient of friction (dry vs steel) dynamic	0.15	0.35	0.25	0.15-0.35	0.20
Deformation under load % 2000 psi /24Hrs.	15 (2000 psi) 6.2 (1200 psi)	4.9 (1200 psi)	7.3	0.5-2.5	0.5
Continuous maximum service temperature °F	−320 +400	−100 +450	−100 +450	180-200	450-500
Limiting PV (psi x fmp)	2,200	11,000	20,000	50,000	20,000 30,000

STEM PACKING

TYPE	USE	TEMP. RANGE (°F/°C)	MAX. PRESSURE psi	PH
PTFE	acids, alkalis solvents, hydraulics	-120 +500°F -85 +260°C	4000	0-14
Chevron molded PTFE	universal, limited pressure	-120 +500°F -85 +260°C	1000	0–14
Braided graphite	100% fire safe operation	-120 +500°F -85 +260°C	4000	0–14
Woven PTFE yarn impregnated with PTFE	cryogenic	-400 +500°F -240 +260°C	4000	0–14

Material specifications reflect the properties of the specific materials and may exceed the limitations or ratings of the ball valve.

SPECIFICATIONS FOR BOLTING

ASTM DESIGNATION	BOLTS				NUTS		
	ALLOY STEEL	STAINLESS STEEL			CARBON STEEL	STAINLESS STEEL	
	A193 B7	A193 B6	A193 B8MSH	A433 630	A194 2H	A194 8M	A194 6
Carbon	0.37-0.49	0.15	0.08	0.07	0.40	0.08	0.15
Manganese	0.65-1.12	1.00	2.00	1.00	1.00	2.00	1.00
Phosphorus	0.040	0.040	0.045	0.040	0.040	0.045	0.040
Sulphur	0.04	0.030	0.030	0.050	0.050	0.030	–
Silicon	0.15-0.35	1.00	1.00	1.00	0.40	1.00	1.00
Nickel	–	–	10.0-14.0	3.00-5.00	–	10.00-14.0	–
Chromium	0.75-1.20	11.50-13.50	16.0-18.0	15.00-17.50	–	16.0-18.0	11.5-13.5
Molybdenum	0.15-0.25	–	2.00-3.00	–	–	2.00-3.00	–
Copper	–	–	–	3.00-5.00	–	–	–
Cobalt	–	–	–	–	–	–	–
Tungsten	–	–	–	–	–	–	–
Boron	–	–	–	–	–	–	–
Iron	–	–	–	–	–	–	–
Special Cond.	–	–	Strain Hard	Age Hard	–	–	–
Heat Treatment	Temp.	Temp.	Carb Sol.	–	–	–	–
Tensile psi minimum	125,000	110,000	125,000	140,000	–	–	–
Yield psi min	105,000	85,000	100,000	115,000	–	–	–
Elong % min	16	15	12	14	–	–	–
Red. Area % minimum	50	50	35	45	–	–	–
Hardness HB	–	–	–	–	248-352	126-300	228–271

BODY GASKETS AND SEALS

TYPE	USE	TEMP. RANGE (°F/°C)	PH
Spiral wound 316 + Graphite	100% fire safe	-328 + 500°F -200 + 260°C	0-14
Spiral wound 316 + PTFE	Cryogenic high corrosion	-328 + 500°F -200 + 260°C	0-14
Solid PTFE	Internal body seals 100% fire safe	-328 + 500°F -200 + 260°C	0-14
Solid Graphite	Internal body seals 100% fire safe	-328 + 500°F -200 + 260°C	0-14
Spiral wound Monel + PTFE	Highly corrosive service	-328 + 500°F -200 + 260°C	0-14

HB-2000 ONE-PIECE (REDUCED PORT) MEMORY SEAL BALL VALVES

CARBON, STAINLESS STEEL AND ALLOY 20, ¼–2" (8–50 mm) THREADED ENDS, RPTFE SEATS

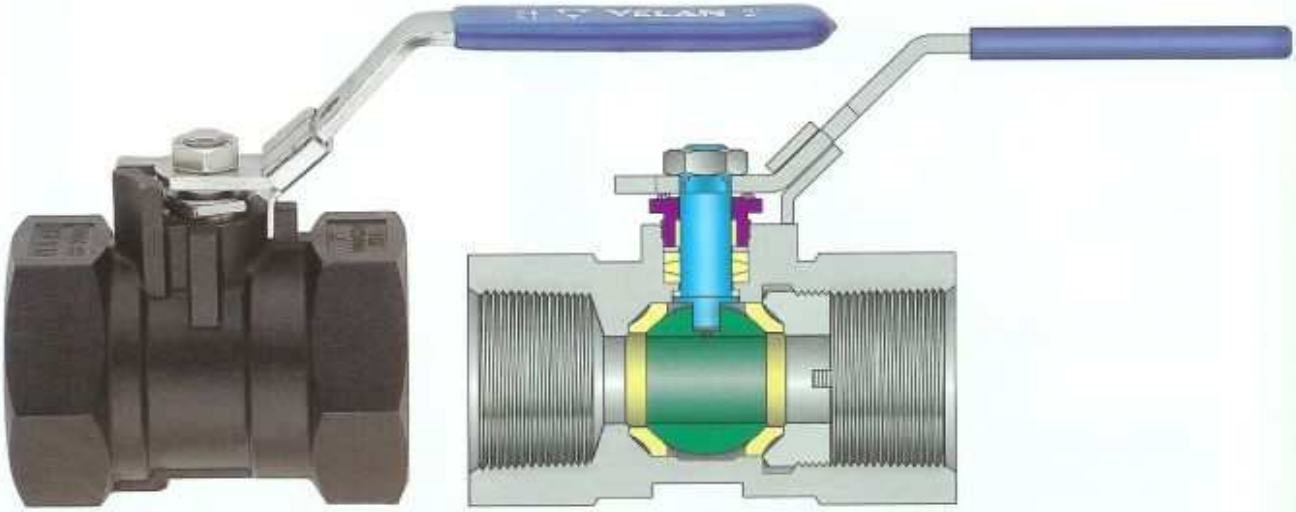

DESIGN FEATURES:

- Memory seal seats compensate automatically for wear and fluctuations in pressure and temperature.
- Multiple solid cup and cone type PTFE or graphite packing – adjustable.
- Stem bearings in gland bushing eliminate side thrust. No wobbling.
- Long cycle life.
- Low torque.
- Blowout-proof stem.
- Thrust washer prevents galling, reduces torque and provides secondary stem seal.
- One-piece heavy wall body for high structural strength to ASME B16.34.
- Full size packing chamber.
- Protective metal washer for packing.
- Adjustable packing with self locking gland nut.
- Stainless steel handle with safety clip. Oval handwheel also available.

APPLICATIONS:

A rugged low-cost ball valve for many industrial, commercial and original equipment applications. For water, oil, gas and saturated steam up to 150 psig.

- **Fire safe** to API 607 Rev. 3, and BS 6755 for standard valves and to API 607 Rev. 4 for valves with graphite packing due to three secondary metal-to-metal seals when resilient seats and seals evaporate in a fire:
  1. Body seating edge for ball.
  2. Stem shoulder-body.
  3. Seat retainer-body.

HB-2000 PRESSURE–TEMPERATURE RATING

MEDIUM	SERVICE CONDITIONS
WOG	2000 psig @ 100°F (138 bar @ 38°C)
	100 psig @ 450°F (7 bar @ 232°C)

FLOW COEFFICIENT Cv

SIZE in	Cv	SIZE in	Cv
¼	2.5	1	14.0
⅜	3.5	1¼	33.0
½	4.8	1½	45.0
¾	9.5	2	58.0

STANDARD MATERIALS

PART	CARBON STEEL	STAINLESS STEEL	ALLOY 20
Body	A 108 or WCB	SS 316 or CF8M	Alloy 20
Seat retainer	A 108	SS 316	Alloy 20
Ball	SS 316		Alloy 20
Seat	RPTFE		
Stem	SS 316		Alloy 20
Thrust washer	RPTFE		
Packing	PTFE		
Packing nut	SS 304		
Packing nut sleeve	RPTFE		
Packing washer	SS 316		
Handle nut	Stainless steel		
Handle	Stainless steel		
Coil spring	Stainless steel		

Materials and other technical data page 41 and 44.

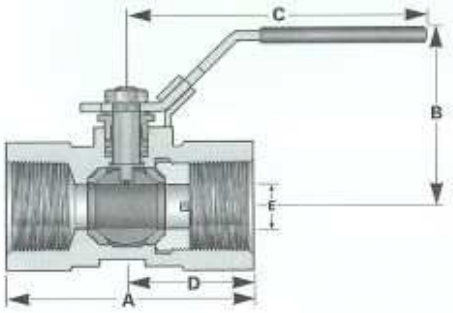

DIMENSIONS AND WEIGHTS

SIZE in mm	HB-2000 A	B	C	D	E	MANUAL WEIGHT lb kg
¼	1.58	1.24	2.67	0.83	0.23	0.3
8	40	32	68	21	6	0.1
⅜	1.75	1.33	3.24	0.90	0.33	0.3
10	44	34	82	23	8	0.1
½	2.43	1.98	3.83	1.30	0.36	0.7
15	62	50	97	33	9	0.3
¾	2.75	2.28	4.00	1.43	0.50	1.0
20	70	58	101	36	13	0.5
1	3.38	2.53	4.03	1.73	0.63	1.3
25	86	64	102	44	16	0.6
1¼	3.69	3.29	6.12	1.94	0.75	3.1
32	94	84	155	49	19	1.4
1½	4.00	3.39	6.12	2.09	0.99	3.4
40	102	86	155	53	25	1.5
2	4.50	4.13	7.06	2.27	1.21	5.8
50	114	105	179	58	30	2.6

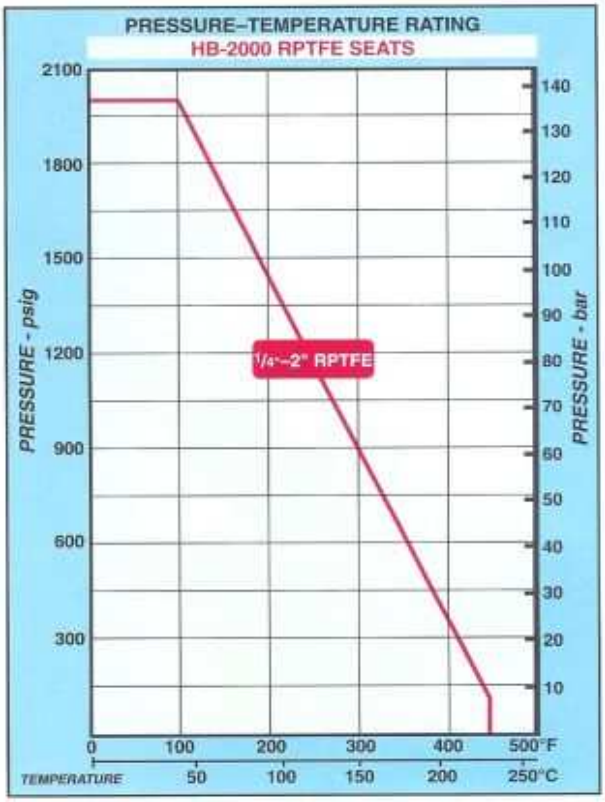

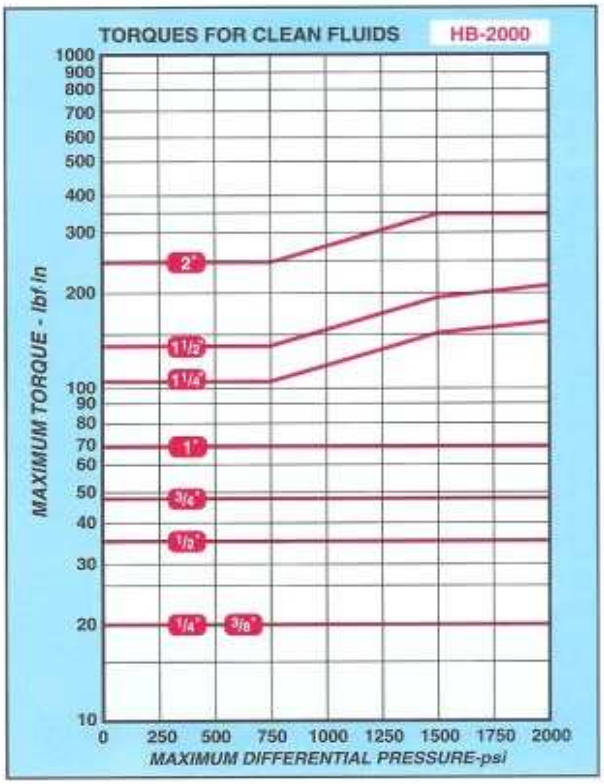

VELAN

OP-4000 ONE-PIECE REDUCED PORT MEMORY SEAL BALL VALVES

CARBON OR STAINLESS STEEL, ¼–2" (15–50 mm) THREADED ENDS NYLATRON, TORLON, RPTFE OR BRONZE-FILLED PTFE SEATS

A VERSATILE LINE OF HIGH QUALITY BALL VALVES FOR HIGH PRESSURE AND PIPELINE SERVICE

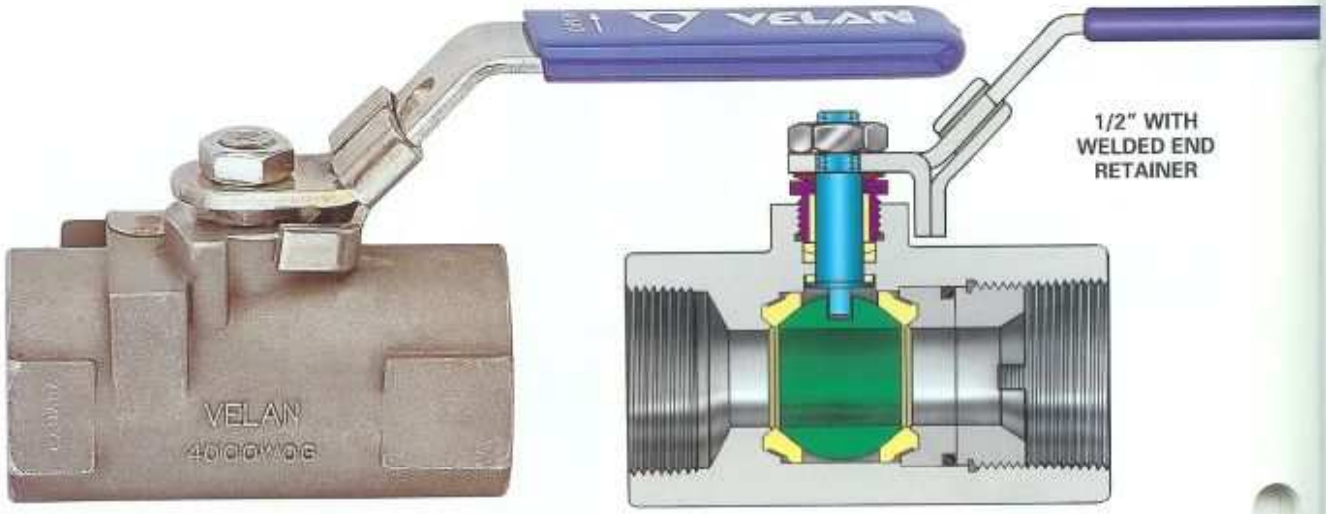

DESIGN FEATURES:

- Wall thickness complies with ASME B16.34, Class 1500.
- Strain hardened stainless steel stem.
- Memory seal seats compensate automatically for wear and fluctuations of pressure and temperature.
- Blowout-proof stem.
- Solid cup and cone type PTFE stem seal– adjustable.
- Stem bearing in gland nut reduces side thrust effect.
- Live-loaded thrust washer prevents galling and provides a secondary stem seal.
- RPTFE stem washer prevents galling, reduces torque and provides secondary seal.
- Stem grounded against body.
- Handle with safety clip (optional).
- Optional oval or high-leverage handwheels.

APPLICATIONS:

These rugged, versatile, highest possible quality ball valves with Nylatron seats are ideally suited for high pressure service, providing tight shut-off and extremely long cycle life for hydraulic and pneumatic control systems up to 4000 psig at 180°F maximum.

The same valves with reinforced Teflon (RPTFE) seats are suitable for high pressure service up to 2000 psig and provide unequaled performance for all fluids, slurries, semi-solids and almost any corrosive service in endless industrial applications, including oil and chemical service.

- **Fire safe** to API 607 Rev. 3, and BS 6755 for standard valves and to API 607 Rev. 4 for valves with graphite packing due to three secondary metal-to-metal seals when resilient seats and seals evaporate in a fire:
  1. Body seating edge for ball.
  2. Stem shoulder-body.
  3. Seat retainer-body.

STANDARD MATERIALS

PART	CARBON STEEL	STAINLESS STEEL
Body	A 105 OR WCB	F 316-A 182 (CF8M)
Seat retainer	A 105	SS 316-A 276
Retainer nut	A 105	SS 316-A 276
Ball	SS 316	
Stem	SS 316 B - A 276 SH[1] (630 for sour gas)	
Thrust washer	RPTFE	
Retainer seal	Viton	
Handle	Stainless steel	
Locknut	CS plated, self-locking	
Packing nut	SS 304	
Belleville washer or coil spring	Plated carbon steel or stainless steel	
Stem guide	RPTFE	

OPTIONAL RESILIENT PARTS			
Service	4000 psig 180°F	3000 psig 400°F	2000 psig 100°F
Seat	Nylatron	Torlon	RPFTE
Packing[2]	PTFE	PTFE	PTFE

(1) SH = Strain hardened.
(2) Use graphite packing for service above 400°F (204°C).

Materials and other technical data page 41 and 44.

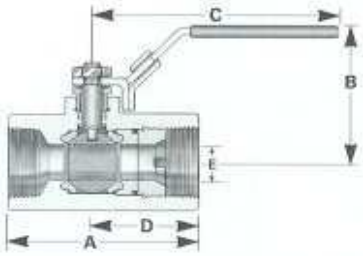

FLOW COEFFICIENT Cv

SIZE in	Cv
½	3.0
¾	6.1
1	10.4
1½	38.0
2	50.0

DIMENSIONS AND WEIGHTS

SIZE in mm	OP-4000 A	B	C	MANUAL D	E	WEIGHT lb kg
½ 15	3.38 86	2.26 58	4.63 118	1.82 46	0.437 11	2.0 0.9
¾ 20	3.25 83	2.26 58	4.63 118	1.69 43	0.437 11	1.6 0.7
1 25	3.88 98	2.45 62	4.72 120	1.99 51	0.562 14	2.6 1.2
1½ 40	4.94 125	3.62 92	6.38 162	2.74 70	0.938 24	5.5 2.5
2 50	5.75 146	4.01 102	7.55 192	3.12 79	1.18 30	10.0 4.5

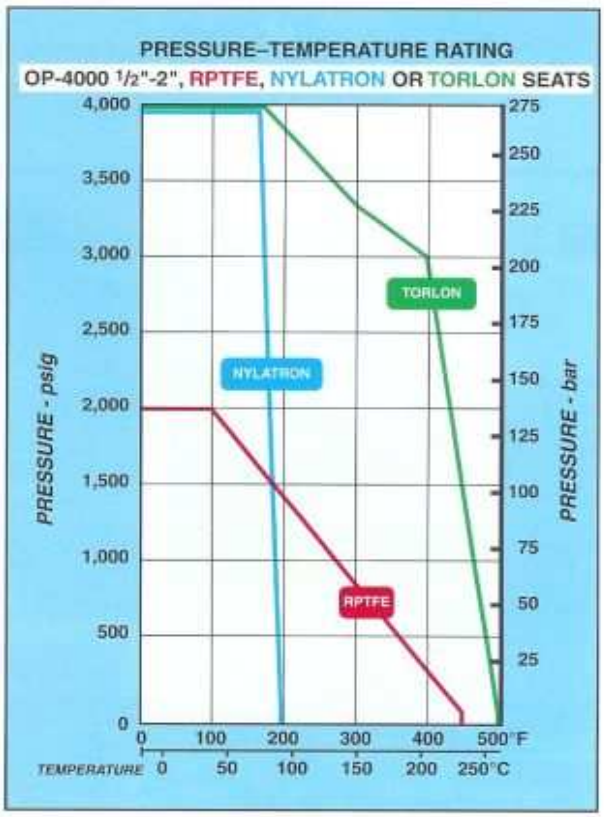

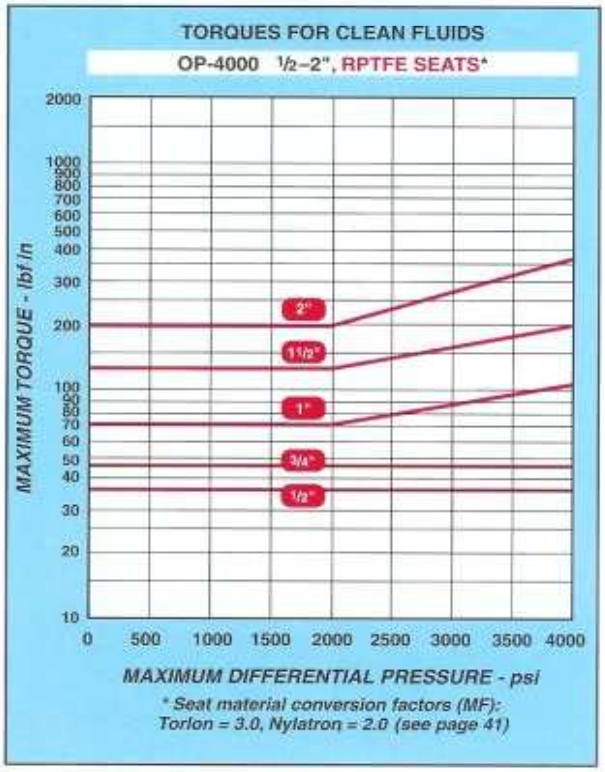

** Seat material conversion factors (MF): Torlon = 3.0, Nylatron = 2.0 (see page 41)*

EE-1500 END-ENTRY REGULAR PORT MEMORY SEAL BALL VALVES

CARBON AND STAINLESS STEEL, ½–2" (15–50 mm)
SEAL WELDED, THREADED ENDS

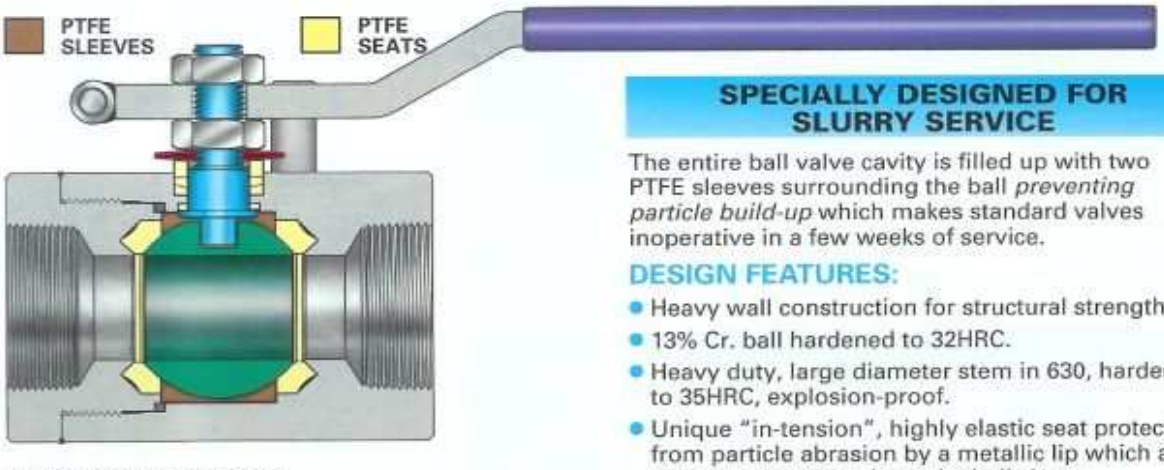

SPECIALLY DESIGNED FOR SLURRY SERVICE

The entire ball valve cavity is filled up with two PTFE sleeves surrounding the ball *preventing particle build-up* which makes standard valves inoperative in a few weeks of service.

DESIGN FEATURES:

- Heavy wall construction for structural strength.
- 13% Cr. ball hardened to 32HRC.
- Heavy duty, large diameter stem in 630, hardened to 35HRC, explosion-proof.
- Unique "in-tension", highly elastic seat protected from particle abrasion by a metallic lip which also acts as a scraper to keep the ball clean.
- Sealing is perfect at low and high pressures.
- Valve is fire safe.
- Body and body end are seal welded.
- Well designed, live-loaded and adjustable stem seal in PTFE or graphite.
- Long heavy duty handle for easy operation. It has a unique, adjustable feature to compensate for any loosening up on the stem.

APPLICATIONS:

The valve is especially designed for service in heavy slurry applications in all process industries up to 1500 psig and 400°F with PTFE seats and sleeves.

STANDARD MATERIALS

PART	CARBON STEEL	SS 316
Body, seat retainer	A 105 or WCB	A 182 (CF8M)
Seat	PTFE	PTFE
Ball	13% Cr. 32HRC	13% Cr. 32HRC
Stem	630 HT 35HRC	630 HT 35HRC
Sleeves	PTFE	PTFE
Packing	PTFE or graphite	PTFE or graphite
Handle	CS A 108	SS 316

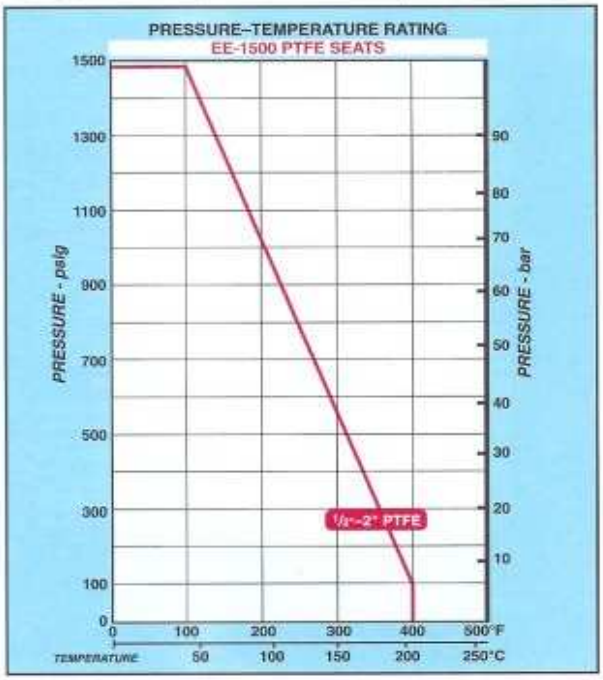

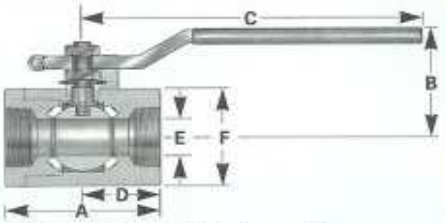

Materials and other technical data page 41 and 44.

DIMENSIONS AND WEIGHTS

SIZE in mm	EE-1500 MANUAL						WEIGHT
	A	B	C	D	E	F	lb kg
½ 15	3.69 94	2.06 52	7.56 192	1.84 47	0.56 14	1.75 45	5 2.3
¾ 20	3.69 94	2.06 52	7.56 192	1.84 47	0.56 14	1.75 45	5 2.3
1 25	4.25 108	2.59 66	9.06 230	2.13 54	0.81 21	2.25 57	10 4.5
1½ 40	5.28 134	3.57 91	11.06 281	2.66 68	1.25 32	3.25 83	20 9
2 50	5.94 151	4.31 110	13.12 333	2.97 75	1.50 38	3.88 98	43 19

VELAN

END-ENTRY MEMORY SEAL BALL VALVES CARBON OR STAINLESS STEEL

EE-1000 CF8M, FULL PORT, RPTFE OR PTFE SEATS, ¼–2" (8–50 mm)
EP-2000 REGULAR PORT, WCB AND CF8M, RPTFE SEATS, ½–2" (15–50 mm)

LOW FUGITIVE EMISSIONS WITH FLANGED GLAND

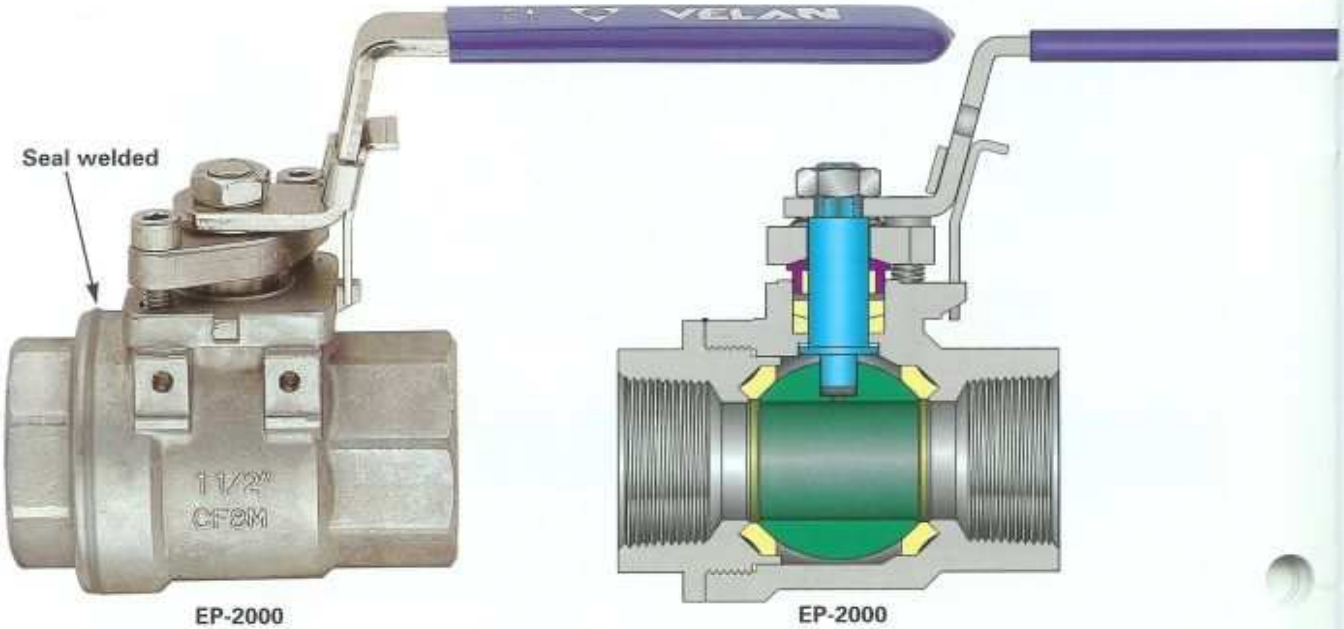

EP-2000 EP-2000

DESIGN FEATURES:

- Memory seal seats compensate automatically for wear and fluctuations in pressure and temperature.
- Multiple solid cup and cone type PTFE or graphite packing – adjustable.
- Stem bearings in cover and gland bushing eliminate side thrust. No wobbling.
- Long cycle life.
- Low torques.
- Blowout-proof stem.
- Live-loaded thrust washer prevents galling and provides a secondary stem seal.
- Fully enclosed body seal plus metal-to-metal seal for body and body end. Body seal protects threads on EP-2000.
- Rugged two-piece design with wall thickness to B16.34 (EP-2000).
- Stainless handle with safety clip. Oval handwheel also available.
- Provision for seal welding on EP-2000.

APPLICATIONS:

The EE-1000 is a full port all stainless steel valve for corrosive service.

The EP-2000 is a regular port WCB or CF8M heavy duty valve for oil fields, chemical and general use.

- **Fire safe** to API 607 Rev. 3, and BS 6755 for standard valves and API 607 Rev. 4 for valves with graphite packing due to three secondary metal-to-metal seals when resilient seats and seals evaporate in a fire:
  1. Body seating edge for ball.
  2. Stem shoulder-body.
  3. Body end-body.

FLOW COEFFICIENT Cv

SIZE	Cv	
in	EE-1000	EP-2000
¼	5.0	—
⅜	5.7	—
½	13.5	10
¾	50.0	19
1	93.0	39
1¼	170.0	65
1½	250.0	87
2	450.0	112

STANDARD MATERIALS

PART	EE-1000	EP-2000 Carbon steel	EP-2000 Stainless steel
Body	CF8M	WCB	CF8M
Body end	CF8M	WCB	CF8M
Stem	SS 316	SS 316	SS 316
Ball	SS 316	SS 316	SS 316
Thrust washer	RPTFE	RPTFE	RPTFE
Seat	PTFE/RPTFE	RPTFE	RPTFE
Packing flange	N/A	WCB	CF8M
Gland bushing	SS 304	SS 304	SS 304
Packing ring(1)	PTFE	PTFE	PTFE
Gland bolt	N/A	Gr. B7	Gr. B8M Cl. 2
Gland bushing sleeve	RPTFE	RPTFE	RPTFE
Body seal	PTFE	PTFE	PTFE
Handle nut	Stainless	Stainless	Stainless
Locking device	SS 304	SS 304	SS 304
Handle	SS 304	SS 304	SS 304
Spring	SS 302	SS 302	SS 302
Packing washer	N/A	SS 316	SS 316

(1) Use graphite packing for service above 400°F (204°C).

Materials and other technical data page 41 and 44.

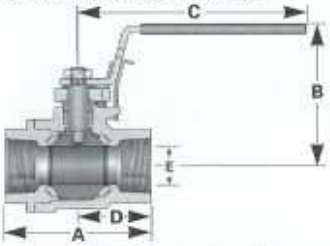

SIZE in mm	EP-2000 A	B	C	D	E	REGULAR PORT WEIGHT lb kg
½ 15	2.50 64	3.33 85	5.47 139	1.26 32	0.50 13	1.2 0.5
¾ 20	2.93 74	3.38 86	5.47 139	1.49 38	0.63 16	1.5 0.7
1 25	3.46 88	4.07 103	5.92 150	1.69 43	0.81 21	3.0 1.4
1¼ 32	4.20 107	4.26 108	5.92 150	2.12 54	1.01 26	4.3 2.0
1½ 40	4.55 116	4.87 124	7.82 199	2.28 58	1.25 32	6.3 2.9
2 50	5.14 131	5.06 129	7.82 199	2.57 65	1.50 38	8.7 3.9

SIZE in mm	EE-1000 A	B	C	D	E	FULL PORT WEIGHT lb kg
¼ 8	2.06 52	2.25 57	4.81 122	1.03 26	0.36 9	0.4 0.2
⅜ 10	2.06 52	2.25 57	4.81 122	1.03 26	0.36 9	0.4 0.2
½ 15	2.50 64	2.60 66	5.00 127	1.27 32	0.50 13	0.9 0.4
¾ 20	3.11 79	2.97 75	5.19 132	1.56 40	0.81 21	1.8 0.8
1 25	3.74 95	3.16 80	6.57 167	1.87 48	1.02 26	2.5 1.1
1¼ 32	4.24 108	4.16 106	7.85 199	2.12 54	1.25 32	4.6 2.1
1½ 40	4.75 121	4.34 110	7.85 199	2.37 60	1.50 38	5.8 2.6
2 50	5.74 146	4.76 121	8.19 208	2.87 73	2.00 51	10.1 4.6

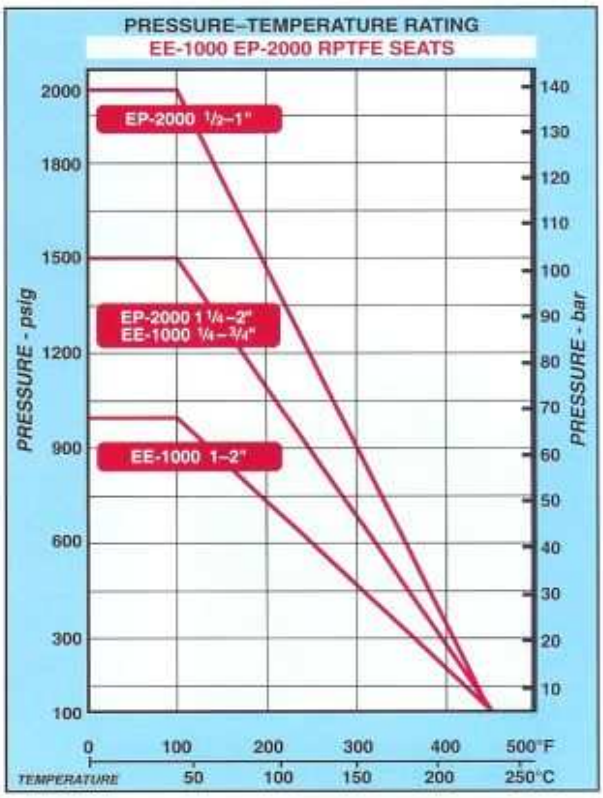

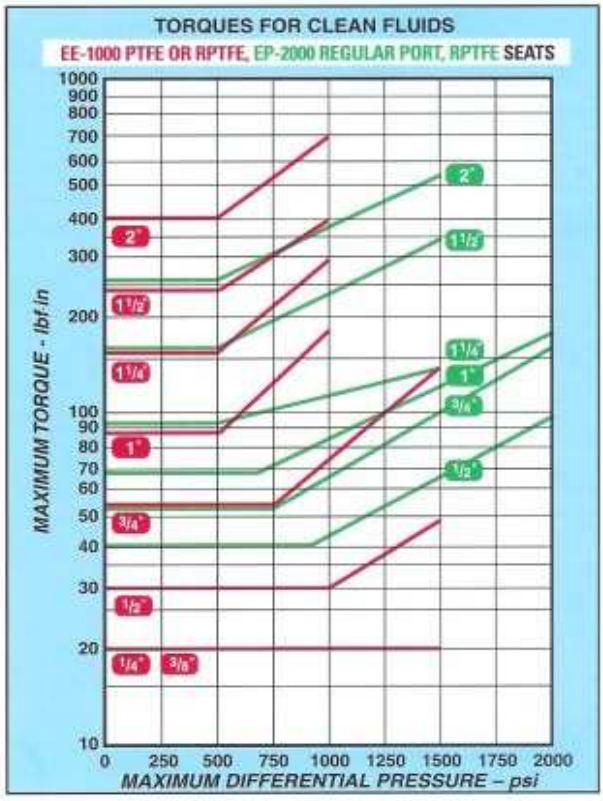

SB-150/300/600 SPLIT-BODY FULL PORT FLANGED MEMORY SEAL BALL VALVES

CAST CARBON OR STAINLESS STEEL, ½–24" (15–600 mm)

LOW FUGITIVE EMISSIONS WITH FLANGED GLAND

FREE-FLOATING BALL

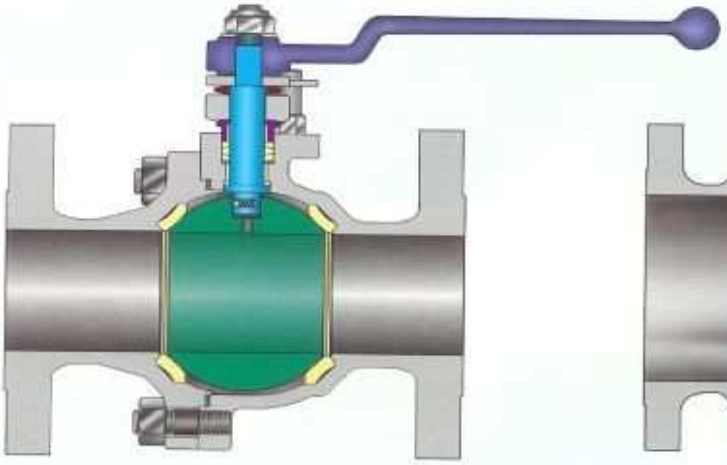

TRUNNION BALL

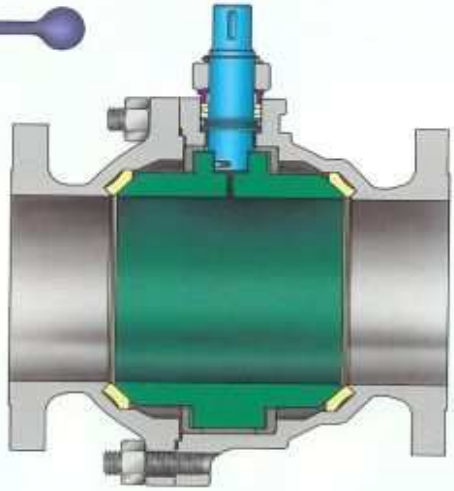

DESIGN FEATURES:

- Memory seal seats compensate automatically for wear and fluctuations of pressure and temperature.
- Multiple solid cup and cone type PTFE stem seal with flanged gland.
- Stem bearings reduce side thrust.
- Long cycle life.
- Low torques.
- Blowout-proof stem.
- Live-loaded thrust washer prevents galling and provides secondary stem seal.
- Fully enclosed spiral wound graphite filled stainless body gasket.
- Meets ASME B16.5 and B16.34, API 608[3], 598 and 607[4].
- UL approved, SB-150/300 (2 to 12").
- AGA and CGA approved, SB-150 (2 to 8").
- Face-to-face dimensions meet ASME B16.10 long pattern.
- Trunnion-mounted ball on larger valves allows the ball to float and shut off the secondary metal seat in case of fire.
- Gear actuator standard on 8–24" SB-150/300 and 6–12" SB-600 valves.
- Locking devices standard ½–1½", optional on 2–8" valves (see page 38).
- Live-loading available.
- TA-Luft certified when supplied with PTFE live-loading packing.
- Cavity fillers available for ½–10".

	150	300	600
FLOATING BALL	½–8"	½–6"[1]	2–3"[2]
TRUNNION BALL	10–24"	8–24"[1]	4–12"

(1) Floating ball optional for 8" valve.
(2) Trunnion optional on 2–3" valve.

APPLICATIONS:

These rugged, versatile, high performance ball valves meet all requirements for oil and gas pipeline service and, when required, meet NACE specifications MR0175 for sour gas (see page 37).

The valves can handle a vast variety of fluids, slurries, semi-solids and almost any corrosive service in chemical, oil, petrochemical, gas, pulp, paper processing and other industries.

Standard valves with RPTFE seats can handle steam service to 150 psig. Valves with carbon graphite filled PTFE seats are suitable for steam up to 250 psig. The valves comply with API 607[4] and BS 6755 fire safe standards and are ideally suited for LP gas, petroleum and petrochemical processing.

NOTE:

(3) For latest revision compliance contact the factory.

(4) Fire safe to API 607 Rev. 3, and BS 6755 for standard valves and to API 607 Rev. 4 for free-floating ball valves with graphite packing due to two secondary metal-to-metal seals when resilient seats and seals evaporate in a fire:

1. Body seating edge for ball.
2. Stem shoulder-body.

STANDARD MATERIALS

PART	CARBON STEEL	STAINLESS STEEL
Body	WCB	CF8M
Ball	SS 316[4]	
Stem	SS 316 or SS 316 SH	
Stem Guide	PTFE or RPTFE	
Seat[2]	PTFE, RPTFE or C-RPTFE	
Body seal	Spiral wound graphite/SS 316	
Thrust washer	RPTFE	
Packing[3]	PTFE or graphite	
Gland[5]	SS 304	
Gland flange	A 105	SS 316
Belleville washers or coil spring	Plated carbon steel or stainless steel	
Body studs	B7 or B7M	B8M, Class 2[1]
Body nuts	2H or 2HM	8M
Handle ½–1½"	Stainless steel	
Handle 2–6"	Malleable iron	
Nut	CS plated	CS plated or SS

(1) Strain hardened. (2) C-RPTFE for Class 600.
(3) Use graphite packing for service above 400°F (204°C).
(4) SS 316/CR plated for Class 600 .
(5) On ½" gland integral with gland flange.

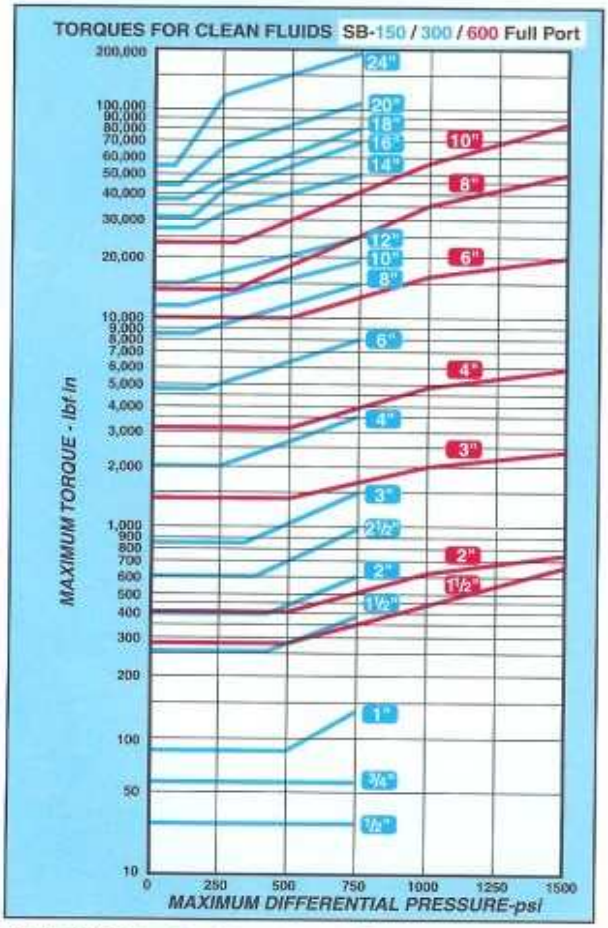

COLOR CODES ■ SB-150/300 ■ SB-600

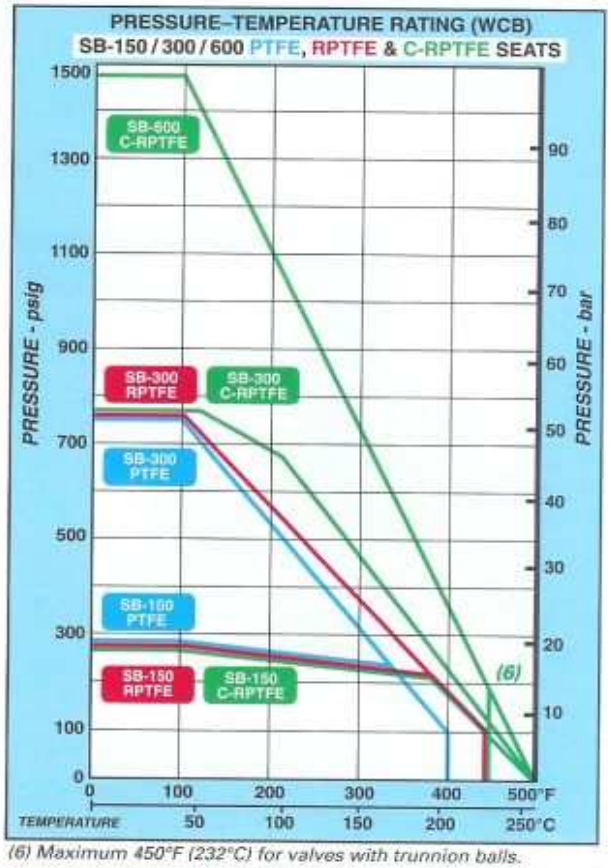

(6) Maximum 450°F (232°C) for valves with trunnion balls.

Materials and other technical data page 41 and 44. Dimensions and weights page 17.

FLOW COEFFICIENT Cv
FULL PORT SB-150/300/600

SIZE in	Cv
½	12
¾	50
1	100
1½	250
2	430
2½	720
3	1,020
4	2,000
6	5,500
8	9,800
10	16,400
12	23,800
14	27,500
16	36,000
18	46,000
20	57,000
24	75,000

SB-150 with air actuator.

SB 150/300 SPLIT-BODY LIVE-LOADED FLANGED MEMORY SEAL BALL VALVES,

CARBON OR STAINLESS STEEL, 2–6" (50–150 mm) WITH SINGLE OR DOUBLE PACKING

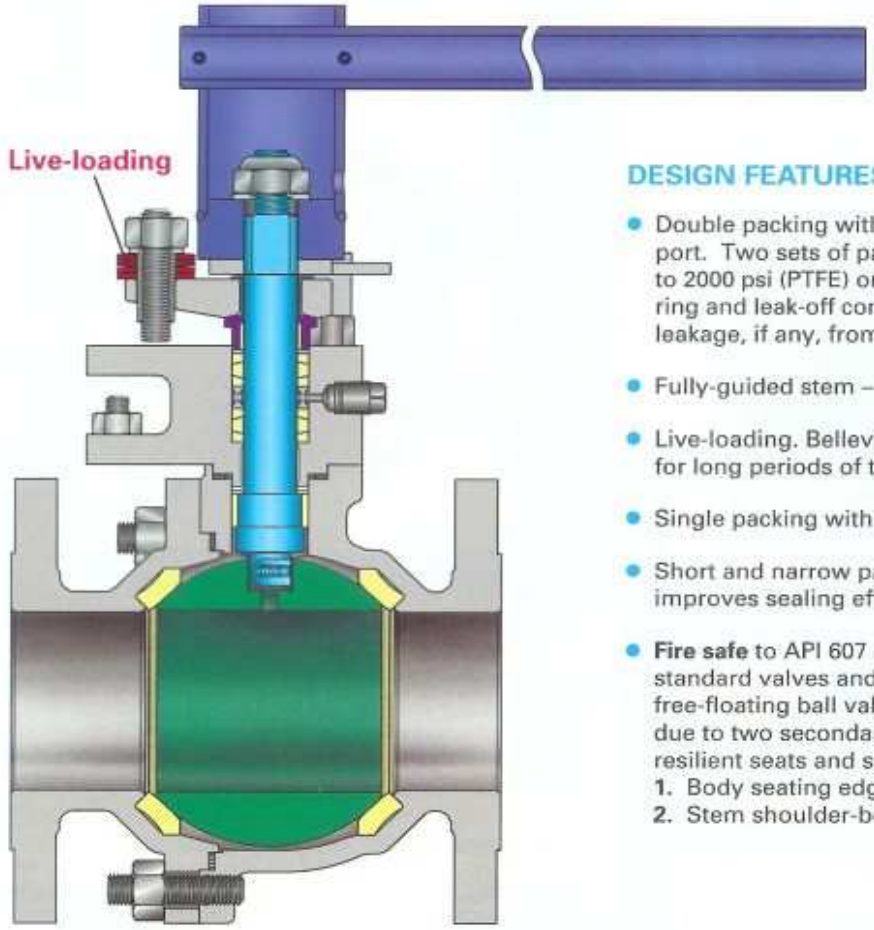

DESIGN FEATURES:

- Double packing with leak-off monitoring purge port. Two sets of packing rings, precompressed to 2000 psi (PTFE) or 4000 psi (graphite). A lantern ring and leak-off connection allows removal of leakage, if any, from bottom packing set.
- Fully-guided stem – no wobbling.
- Live-loading. Belleville springs keep stem tight for long periods of time without maintenance.
- Single packing with live-loading also available.
- Short and narrow packing chamber improves sealing effectiveness.
- **Fire safe** to API 607 Rev. 3, and BS 6755 for standard valves and to API 607 Rev. 4 for free-floating ball valves with graphite packing due to two secondary metal-to-metal seals when resilient seats and seals evaporate in a fire:
  1. Body seating edge for ball
  2. Stem shoulder-body.

TORQUES:
Add 30% to values shown on pages 13 and 15.

FLOW COEFFICIENT Cv

SIZE in	Cv Full Port
2	430
3	1020
4	2000
6	5500

Material and other technical data page 41 and 44.
Dimensions and weights page 17.

SB-150 PRESSURE–TEMPERATURE RATING

MEDIUM	SERVICE CONDITIONS
WOG	285 psig @ 100°F (20 bar @ 38°C)
	100 psig @ 450°F (7 bar @ 232°C)
Steam	150 psig (10 bar)(1)

SB-300 PRESSURE–TEMPERATURE RATING

MEDIUM	SERVICE CONDITIONS
WOG	740 psig @ 100°F (51 bar @ 38°C)
	100 psig @ 450°F (7 bar @ 232°C)
Steam	250 psig (17 bar)(2)

(1) RPTFE seats. (2) C-RPTFE.

SB-150/300/600 SPLIT-BODY REGULAR PORT FLANGED MEMORY SEAL BALL VALVES

CAST CARBON OR STAINLESS STEEL, 2–24" (50–600 mm)
½–1½" (15–40 mm) IN UNIBODY PAGE 18

LOW FUGITIVE EMISSIONS WITH FLANGED GLAND

FREE-FLOATING BALL

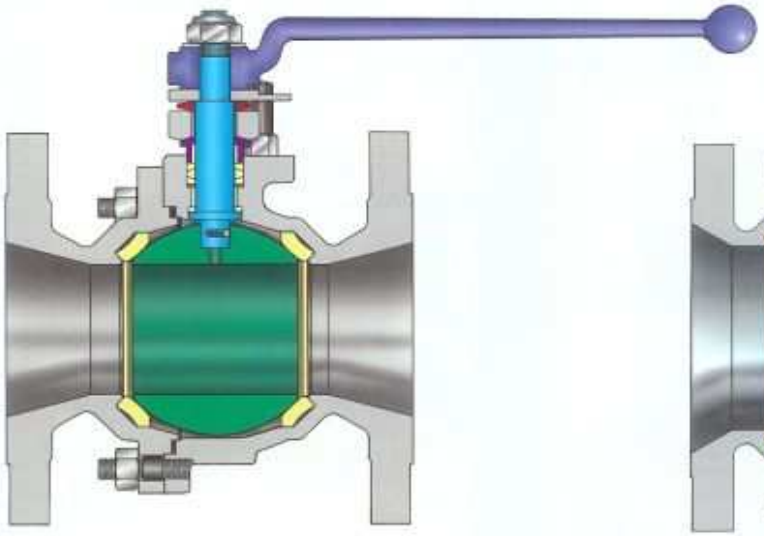

TRUNNION BALL

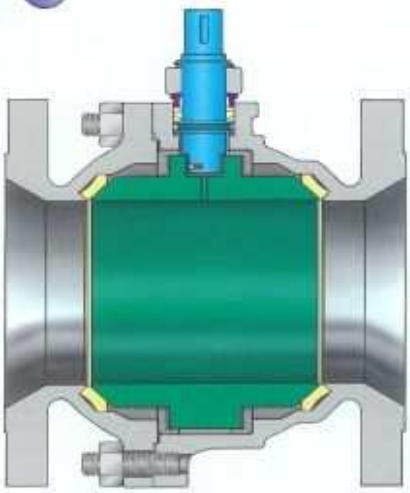

DESIGN FEATURES:

- Memory seal seats compensate automatically for wear and fluctuations of pressure and temperature.
- Multiple solid cup and cone PTFE stem seal with flanged gland.
- Stem bearings reduce side thrust.
- Long cycle life.
- Low torques.
- Blowout-proof stem.
- Live-loaded thrust washer prevents galling and provides secondary stem seal.
- Fully enclosed spiral wound graphite filled stainless body gasket.
- Meets ASME B16.5 and B16.34, API 608[2], 598 and 607[3].
- UL approved, SB-150/300 (2 to 12").
- SB-150/300 2–16" face-to-face dimensions meet ASME B16.10 short pattern.
- SB-150/300 18–24" and SB-600 2–12" face-to-face dimensions meet ASME B16.10 long pattern.
- Trunnion-mounted ball on larger valves allows the ball to float and shut off the secondary metal seat in case of fire.
- Gear actuator standard on 10–24" SB-150/300 valves and 8–12" SB-600 valves.
- Locking devices optional on 2–8" valves (see pg. 38).
- Live-loading available.
- TA-Luft certified when supplied with PTFE live-loading packing.
- Cavity fillers available for 2–12".

	150	300	600
FLOATING BALL	2–10"	2–8"	2–4"[1]
TRUNNION BALL	12–24"	10–24"	6–12"

(1) Trunnion optional on 3–4"

APPLICATIONS:

These rugged, versatile, high performance ball valves meet all requirements for oil and gas pipeline service and, when required, meet NACE specifications MR0175 for sour gas (see page 37).

The valves can handle a vast variety of fluids, slurries, semi-solids and almost any corrosive service in chemical, oil, petrochemical, gas, pulp, paper processing and other industries.

Standard valves with RPTFE seats can handle steam service to 150 psig. Valves with carbon graphite filled PTFE seats are suitable for steam up to 250 psig. The valves comply with API 607[3] and BS 6755 fire safe standards and are ideally suited for LP gas, petroleum and petrochemical processing.

NOTE:

(2) For latest revision compliance contact the factory.

(3) Fire safe to API 607 Rev. 3, and BS 6755 for standard valves and to API 607 Rev. 4 for free-floating ball valves with graphite packing due to two secondary metal-to-metal seals when resilient seats and seals evaporate in a fire:

1. Body seating edge for ball.

2. Stem shoulder-body.

STANDARD MATERIALS

PART	Carbon Steel	Stainless Steel
Body	WCB	CF8M
Ball	SS 316[4]	
Stem	SS 316 or SS 316 SH	
Stem Guide	PTFE or RPTFE	
Seat[2]	PTFE, RPTFE or C-RPTFE	
Body seal	Spiral wound graphite/SS 316	
Thrust washer	RPTFE	
Packing[3]	PTFE or graphite	
Gland	SS 304	
Gland flange	A105	SS 316
Belleville washers or coil spring	Plated carbon steel or stainless steel	
Body studs	B7 or B7M	B8M, Class 2[1]
Body nuts	2H or 2HM	8M
Handle 2-8"	Malleable iron	
Nut	CS plated	CS plated or SS

(1) Strain hardened.
(2) C-RPTFE for Class 600.
(3) Use graphite packing for service above 400°F (204°C).
(4) SS 316/CR plated for Class 600.

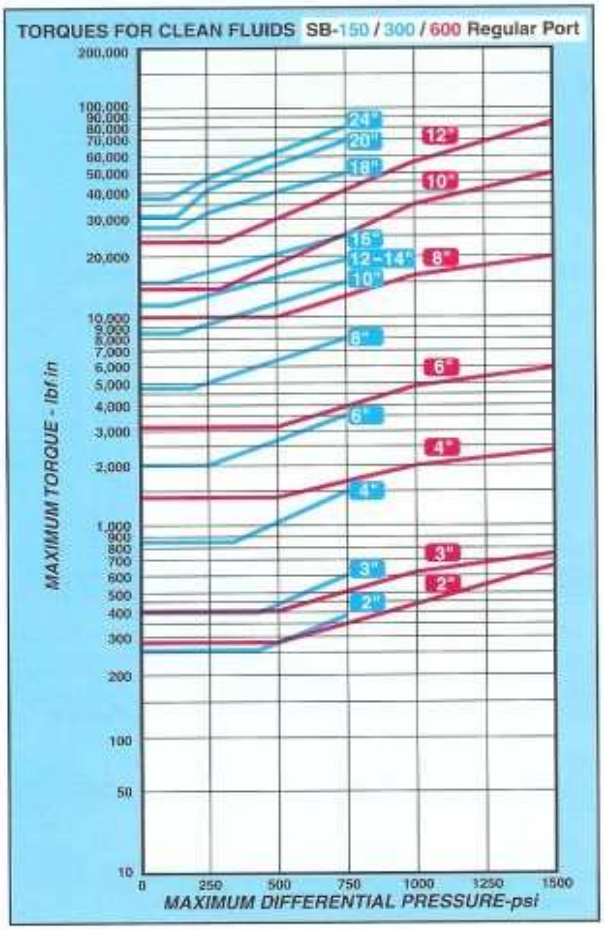

COLOR CODES ■ SB-150/300 ■ SB-600

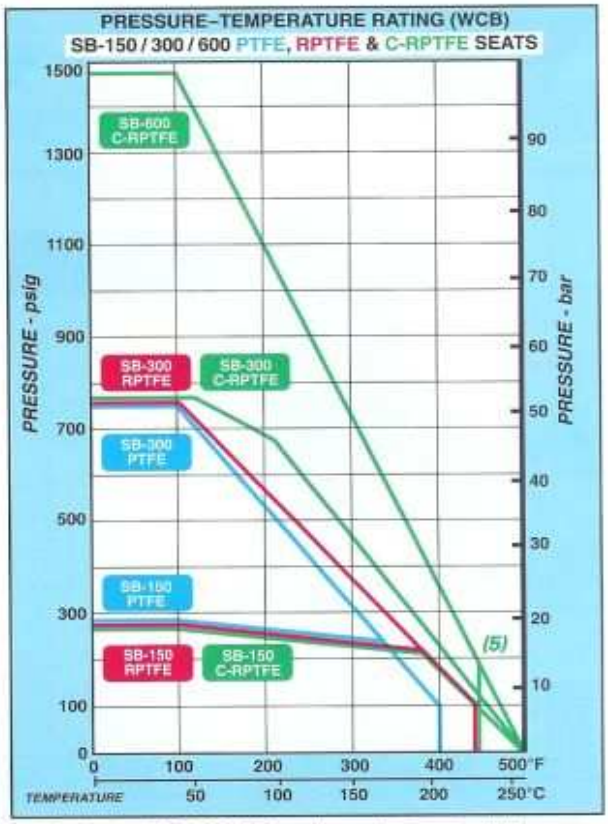

(5) Maximum 450°F (232°C) for valves with trunnion balls.

Materials and other technical data page 41 and 44.
Dimensions and weights page 17.

FLOW COEFFICIENT Cv

REGULAR PORT
SB-150/300/600

SIZE in	Cv
2	130
3	250
4	540
6	770
8	1,900
10	3,900
12	6,700
14	5,200
16	8,050
18	12,500
20	15,500
24	27,000

Manual gear actuated ball valve.

TE-150/300/600 TOP-ENTRY REGULAR OR FULL PORT MEMORY SEAL BALL VALVES

CARBON OR STAINLESS STEEL AND OTHER MATERIALS
REGULAR PORT ½–4" (15–100 mm) FULL PORT ⅜–3" (10–80 mm),
THREADED, SOCKET WELD, BUTT WELD OR FLANGED, CLASSES 150, 300, 600

LOW FUGITIVE EMISSIONS

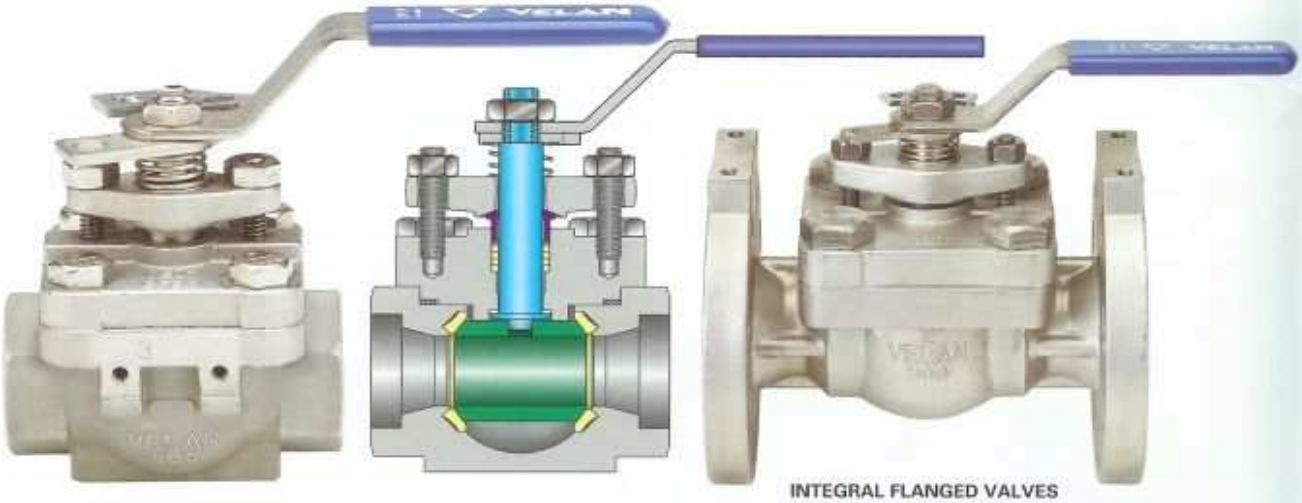

INTEGRAL FLANGED VALVES

Integral flanged valves meet ASME B16.10 face-to-face. Sizes ¾", 1", 2", 3" and 4" Class 150 have tapped holes due to lack of space.

DESIGN FEATURES:

- Memory seal seats compensate automatically for wear and fluctuations of pressure and temperature.
- Multiple solid cup and cone type PTFE or graphite packing – adjustable.
- Stem bearings in cover and gland bushing eliminate side thrust. No wobbling.
- Longer cycle life.
- Lower torques.
- Blowout-proof stem.
- Live-loaded thrust washer prevents galling and provides a secondary stem seal.
- Meets ASME B16.5 and B16.34, API 608[1], 598 and 607[2].
- High sealing integrity of body-cover joint due to fully-enclosed spiral wound graphite gasket design.
- Permits in-line access for seat replacement.
- Flanged gland.
- Body-cover joint not affected by pipe stresses.
- Wall thickness complies with ASME B16.34.
- Can be welded into line without disassembly in accordance with Velan installation instructions.
- Stainless steel trim on all valves including handle.
- Oval handles as well as extensions available.
- Stem grounded against body.
- Locking devices standard.
- Tapping for mounting actuators standard.
- AGA and CGA approved, regular port, threaded ends.
- Valves comply with Nace MR0175 for sour gas service when required (refer to page 37).
- Optional topworks (page 23):
  1. Live-loaded single or double packing.
  2. TA-Luft certified when supplied with PTFE live-loading packing.
  3. Bellows seal design.

NOTE:
(1) For latest revision compliance contact the factory.
(2) FIRE SAFE to API 607 Rev. 3, and BS 6755 for standard valves and API 607 Rev. 4 for valves with graphite packing (Spiral wound graphite/SS 316 gasket standard).

APPLICATIONS:

A superior quality, rugged, and universal purpose valve for all fluids, slurries, semi-solids and corrosive services in endless industrial, chemical and original equipment applications.

- Dimensions and weights on page 25.
- Automation pages 39–40.

MATERIALS & PARTS LIST

PART	CARBON STEEL			STAINLESS	MONEL	ALLOY 20	HASTELLOY C	TITANIUM
	SS 316 Trim	Monel Trim	Hastelloy C Trim	316 (CF8M)				
Body and bonnet	A 105 or WCB			CF8M	Monel	Alloy 20	Hast. C	Titanium
Seat	PTFE (1)			PTFE (1)				
Ball	SS 316	Monel	Hast. C	SS 316	Monel	Alloy 20	Hast. C	Titanium
Stem	SS 316	Monel	Hast. C	SS 316	Monel	Alloy 20	Hast. C	Titanium
Thrust washer	RPTFE			RPTFE				
Body seal	SS 316 Graphite			SS 316 Graphite	Monel-graphite	Alloy 20-graphite	Hast. C-graphite	Titanium-graphite
Packing	PTFE or Graphite			PTFE or Graphite				
Stem bushing	RPTFE			RPTFE				
Packing flange	WCB			CF8M				Titanium
Gland follower	SS 304			SS 304	Monel	Alloy 20	Hast. C	Titanium
Bonnet studs	B7			B8M Cl.2	Inconel			B8M Cl.2
Bonnet nuts	2H			8M	Inconel			8M
Handle	SS 304			SS 304				
Handle nut	SS Commercial			SS Commercial				
Coil spring	SS 302			SS 302				

(1) Other materials available such as: RPTFE, Delrin®, C-RPTFE, PEEK, PFA.

PRESSURE–TEMPERATURE RATING

MEDIUM	SEAT CONDITIONS	SERVICE
WOG	PTFE & RPTFE	1480 psig(2) @ 100°F (102 bar @ 38°C)
	PTFE	100 psig @ 400°F (7 bar @ 204°C)
	RPTFE	100 psig @ 450°F (7 bar @ 232°C)
Steam	RPTFE	250 psig @ 406°F (17 bar @ 208°C)
	C-RPTFE	450 psig @ 456°F (31 bar @ 235°C)

(2) See pressure–temperature rating chart for details by size.

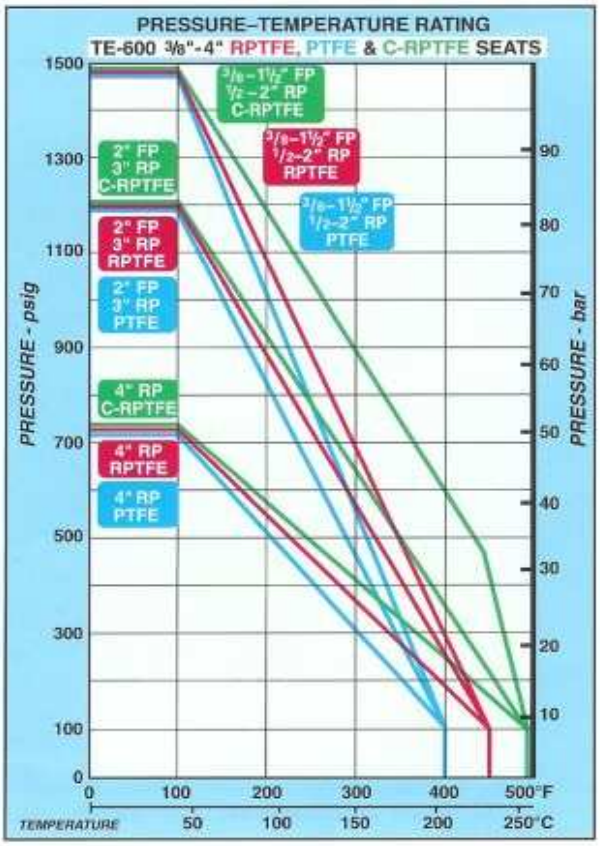

FLOW COEFFICIENT Cv FOR ALL TE-150/300/600 VALVES

SIZE in	REGULAR PORT	FULL PORT
⅜	—	6
½	8	26
¾	13.5	75
1	34	103
1½	65	206
2	104	322
3	200	760
4	720	—

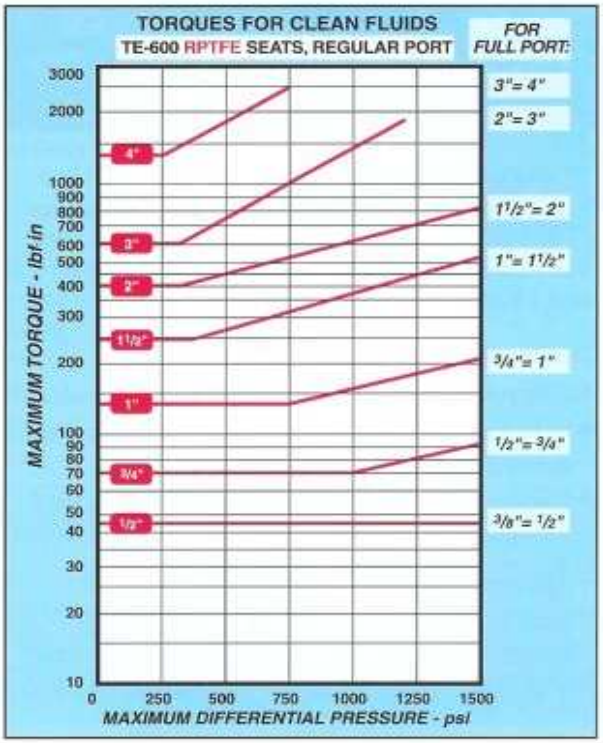

VELAN TOP-ENTRY BALL VALVES
SUPERIOR TO THREE-PIECE BALL VALVES

VELAN FIRE SAFE TOP-ENTRY

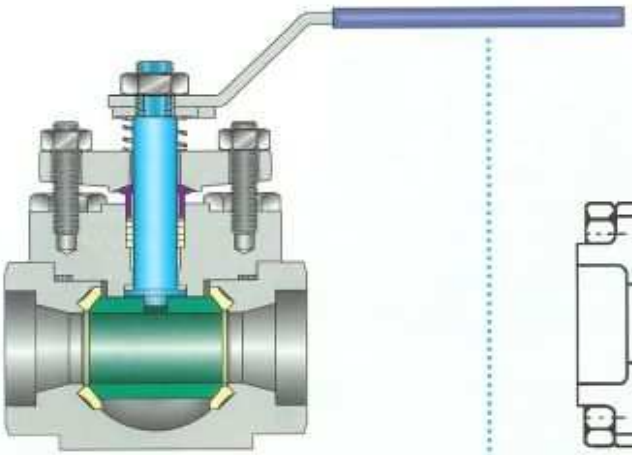

1. Two-leakage paths (gasket and packing).
2. Fully guided stem.
3. In lab tests 0 ppm emissions to 100,000 cycles, 500,000 with live-loading.
4. Easy to weld the one-piece body into the line without disassembly. The integrity of the valve is not affected.
5. All parts can be easily serviced or replaced in-line.

THREE-PIECE FIRE SAFE VALVES

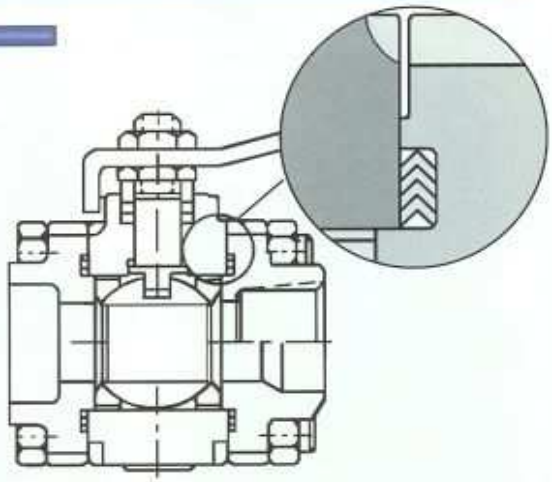

1. Three-leakage paths (2 gaskets and packing).
2. Stem can wobble, cause leakage.
3. Larger emissions, lower cycle life.
4. Welding can affect the integrity of the valve due to tendency to separate the three-bolted body parts during the welding.
5. Valve can not be serviced in-line, because of the fire safe design with spiral wound gaskets which requires internal guiding of the two end pieces. The guiding prevents the centerpiece to swing out.

IN-LINE SERVICE

STEP 1
Remove cover assembly.

STEP 2
Remove ball.
Turn ball 90° and remove.

STEP 3
Remove seats.
Once ball is out, a simple jolt with fingers or tool removes seat.

DIMENSIONS & WEIGHTS

TE- 600 TOP-ENTRY THREADED, SOCKET OR BUTT WELD[1]

SIZE	MANUAL				(REGULAR PORT)			WEIGHT
in mm	A	B	C	D	E	F	G	lb kg
½ 15	2.63 67	3.47 88	4.62 117	1.31 33	0.44 11	0.86 22	0.38 10	2 0.91
¾ 20	3.25 83	3.60 91	4.62 117	1.63 41	0.56 14	1.07 27	0.50 13	3 1.4
1 25	3.75 95	4.82 122	6.44 164	1.88 48	0.81 21	1.33 34	0.50 13	6 3
1½ 40	4.88 124	5.66 144	7.55 192	2.44 62	1.19 30	1.92 49	0.50 13	14 6
2 50	6.00 152	5.92 150	7.55 192	3.00 76	1.50 38	2.41 61	0.63 16	20 9
3 80	7.25 184	6.45 164	11.91 302	3.63 92	2.00 51	3.54 90	0.63 16	35 16
4[2] 100	12.00 305	9.13 232	19.88 505	6.00 152	3.00 76	— —	— —	60 27

SIZE	MANUAL				(FULL PORT)			WEIGHT
in mm	A	B	C	D	E	F	G	lb kg
⅜ 10	2.63 67	3.47 88	4.62 117	1.31 33	0.44 11	0.69 18	0.38 10	2 0.91
½ 15	3.25 83	3.60 91	4.62 117	1.63 41	0.56 14	0.86 22	0.38 10	3 1.4
¾ 20	3.75 95	4.82 122	6.44 164	1.88 48	0.81 21	1.07 27	0.50 13	6 3
1 25	4.88 124	5.66 144	7.31 186	2.44 62	1.19 30	1.33 34	0.50 13	15 7
1½ 40	6.00 152	5.92 150	7.31 186	3.00 76	1.50 38	1.92 49	0.50 13	22 10
2 50	7.25 184	6.45 164	11.91 302	3.63 92	2.00 51	2.41 61	0.63 16	30 14
3 80	11.12 283	9.13 232	19.88 505	5.56 141	3.00 76	3.54 90	0.63 16	52 24

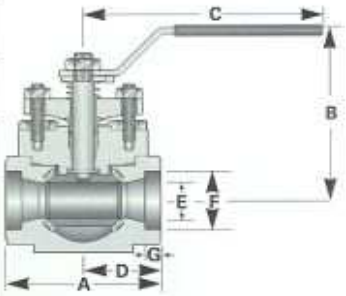

TE- 600 TOP-ENTRY LIVE-LOADED WITH DOUBLE PACKING AND LEAK-OFF[1]

SIZE	MANUAL				(REGULAR PORT)			WEIGHT
in mm	A	B	C	D	E	F	G	lb kg
½ 15	2.63 67	4.31 110	4.63 118	1.31 33	0.44 11	0.86 22	0.38 10	4 1.8
¾ 20	3.25 83	4.44 113	4.63 118	1.63 41	0.56 14	1.07 27	0.50 13	5 2.3
1 25	3.75 95	5.60 142	6.44 164	1.88 48	0.81 21	1.33 34	0.50 13	10 4.5
1½ 40	4.88 124	6.40 163	7.55 192	2.44 62	1.19 30	1.92 49	0.50 13	18 8
2 50	6.00 152	6.59 167	7.55 192	3.00 76	1.50 38	2.41 61	0.63 16	22 10
3 80	7.25 184	7.83 199	11.91 303	3.62 92	2.00 51	3.54 90	0.63 16	41 19
4[2] 100	12.00 305	10.70 272	19.88 505	6.00 152	3.00 76	— —	— —	66 30

SIZE	MANUAL				(FULL PORT)			WEIGHT
in mm	A	B	C	D	E	F	G	lb kg
⅜ 10	2.63 68	4.31 110	4.63 118	1.31 33	0.44 11	0.69 18	0.38 10	4 1.8
½ 15	3.25 83	4.44 113	4.63 118	1.63 41	0.56 14	0.86 22	0.38 10	5 2.3
¾ 20	3.75 95	5.60 142	6.44 164	1.88 48	0.81 21	1.07 27	0.50 13	11 5
1 25	4.88 124	6.40 163	7.55 192	2.44 62	1.19 30	1.33 34	0.50 13	20 9
1½ 40	6.00 152	6.59 167	7.55 192	3.00 76	1.50 38	1.92 49	0.50 13	30 14
2 50	7.25 184	7.83 199	11.91 303	3.62 92	2.00 51	2.41 61	0.63 16	40 18
3 80	11.12 282	10.70 272	19.88 505	5.56 141	3.00 76	3.54 90	0.63 16	62 28

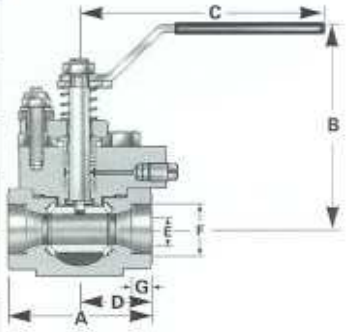

TE-150/300/600 TOP-ENTRY FLANGED

SIZE		CLASS 150 Regular Port				CLASS 300 Regular Port				CLASS 600 Full Port			
		A		Weight		A		Weight		A		Weight	
in	mm	in	mm	lb	kg	in	mm	lb	kg	in	mm	lb	kg
½	15	4.25	108	4.4	2.0	5.50	140	5.5	2.5	6.50	165	7.0	3.2
¾	20	4.63	118	6.2	2.8	6.00	152	8.4	3.8	7.50	191	11	5
1	25	5.00	127	9.6	4.3	6.50	165	13	6	8.50	216	17	8
1½	40	6.50	165	19	9	7.50	191	24	10.2	9.50	241	28	13
2	50	7.00	178	28	13	8.50	216	33	15	11.50	292	37	17
3	80	8.00	203	55	25	11.12	282	62	28	14.00	356	87	39
4	100	9.00	229	109	49	12.00	305	123	56	N/A	N/A	N/A	N/A

(1) For butt weld dimensions, contact the factory.
(2) Dimensions shown are for butt weld.

UB-150/300 UNIBODY REGULAR PORT FLANGED MEMORY SEAL BALL VALVES,

CAST CARBON OR STAINLESS STEEL, ¼–4" (15–100 mm)
½" (15 mm) UB-150/300 is full port)

LOW FUGITIVE EMISSIONS WITH FLANGED GLAND

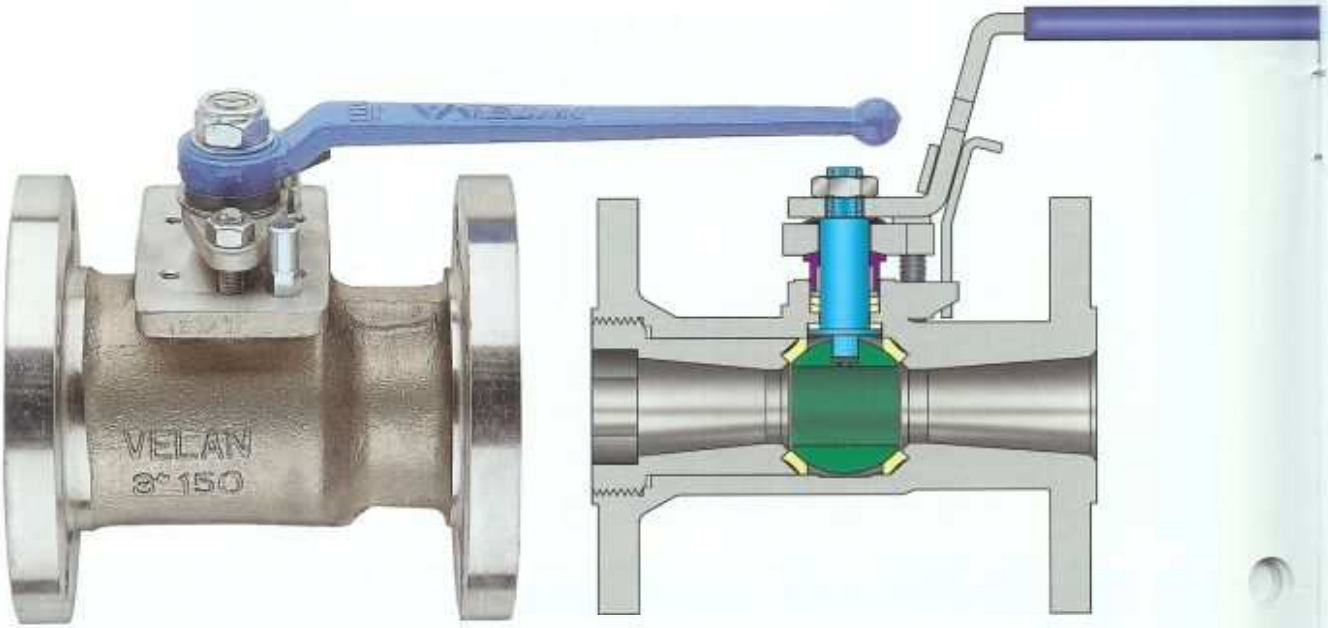

DESIGN FEATURES:

- Memory seal seats (see pages 4 and 5).
- Multiple solid cup and cone type PTFE stem seal with flanged gland.
- Stem bearing reduces side thrust.
- Long cycle life.
- Low torques.
- Blowout-proof stem.
- Thrust washer prevents galling.
- Meets ASME B16.5 and B16.34, API 608[1], 598 and 607[2].
- Fully guided stem – no wobbling.
- Stainless handle with safety clip standard on ½–2" valves. Optional locking device on 3–4" valves (see page 38).
- Meets NACE MR0175: (see page 37).
- 4-bolt bracket to ISO standard.
- Face-to-face dimensions meet ASME B16.10.

APPLICATIONS:

These rugged, versatile, high performance ball valves meet all requirements for oil and gas pipeline service and meet NACE specifications MR0175 for sour gas.

The valves can handle a vast variety of fluids, slurries, semi-solids and almost any corrosive service in chemical, oil, petrochemical, gas, pulp, paper processing and other industries.

Standard valves with RPTFE seats can handle steam service to 150 psig.

NOTE:

(1) For latest revision compliance contact the factory.

(2) Fire safe to API 607 Rev. 3, and BS 6755 for standard valves and to API 607 Rev. 4 for valves with graphite packing due to three secondary metal-to-metal seals when resilient seats and seals evaporate in a fire:

1. ***Body seating edge for ball.***
2. ***Stem shoulder-body.***
3. ***Seat retainer-body.***

STANDARD MATERIALS

PART		CARBON STEEL	STAINLESS STEEL
Body		WCB	CF8M
Ball		SS 316	
Stem		SS 316	
Stem Guide		PTFE or RPTFE	
Seat		PTFE or RPTFE	
Body seal		PTFE	
Thrust washer		RPTFE	
Packing(1)		PTFE or graphite	
Gland(2)		SS 304	
Gland flange		WCB	CF8M
Belleville washers or coil spring		Plated carbon steel or stainless steel	
Handle	½–2"	Stainless	
	3–4"	Malleable iron	
Nut		CS plated	CS plated or SS
Safety Clip(3)		SS 304	

(1) Use graphite packing for service above 400°F (204°C).
(2) ½" and ¾": gland integral with gland flange.
(3) ½–2" only.

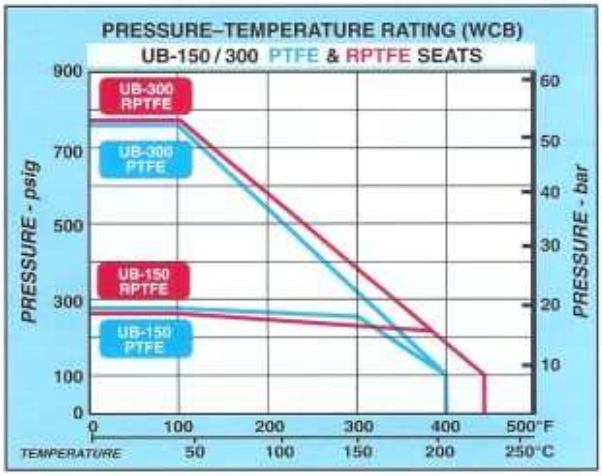

3" UB-150 in carbon steel.

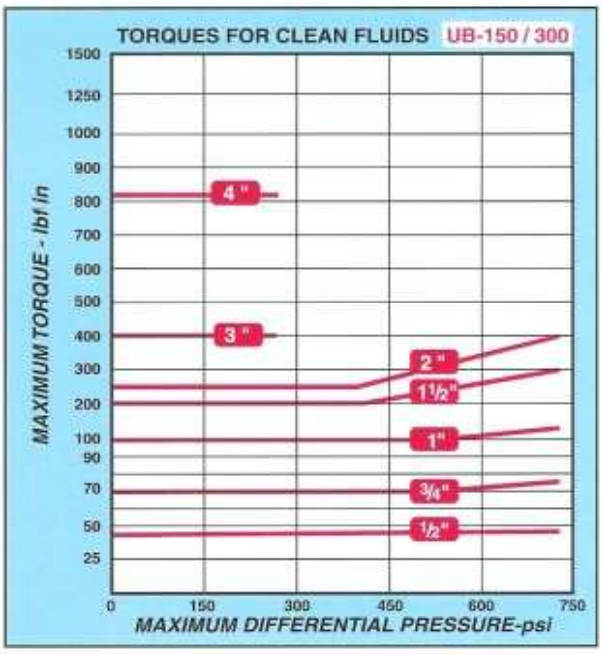

FLOW COEFFICIENT Cv

SIZE in	Cv
½	9
¾	15
1	38
1½	125
2	165
3	250
4	540

Materials and other technical data page 41 and 44.

DIMENSIONS & WEIGHTS

SIZE in mm	UB-150 REGULAR PORT A	B	C	D	E	F	WEIGHT lb kg
½ 15	4.25 108	3.24 82	5.47 139	2.13 54	0.50 13	3.50 89	3.1 1.4
¾ 20	4.63 117	3.39 86	5.47 139	2.31 59	0.63 16	3.88 99	4.2 1.9
1 25	5.00 127	4.07 103	5.92 150	2.50 64	0.75 19	4.25 108	6.0 2.7
1½ 40	6.50 165	4.77 121	7.82 198	3.47 88	1.21 31	5.00 127	11.2 5.1
2 50	7.00 178	5.04 128	7.82 198	3.72 94	1.44 37	6.00 152	16.6 7.5
3 80	8.00 203	5.45 138	10.38 264	4.50 114	2.00 51	7.50 191	36 16.3
4 100	9.00 229	7.38 187	11.91 302	5.00 127	3.00 76	9.00 229	62 28

UB-300 REGULAR PORT A	B	C	D	E	F	WEIGHT lb kg
5.50 140	3.24 82	5.47 139	3.38 86	0.50 13	3.75 95	4.2 1.9
6.00 152	3.39 86	5.47 139	3.69 94	0.63 16	4.63 117	6.8 3.1
6.50 165	4.07 103	5.92 150	4.00 102	0.75 19	4.88 124	9.4 4.3
7.50 191	4.77 121	7.82 198	4.47 114	1.21 31	6.13 156	17.5 7.9
8.50 216	5.04 128	7.82 198	5.22 133	1.44 37	6.50 165	22.1 10.0

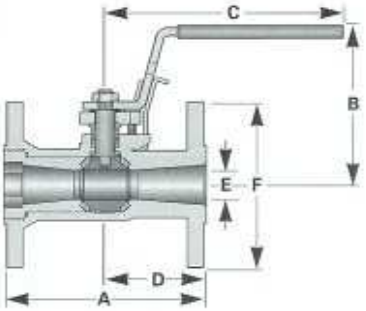

SPLIT-BODY DIMENSIONS AND WEIGHTS

SIZE in mm	SB-150 FULL PORT A	B	C	D	E	F	WEIGHT lb kg
½ 15	4.25 108	3.49 89	5.31 135	1.62 41	0.50 13	3.50 89	4 2
¾ 20	4.63 118	4.09 104	5.56 141	1.75 445	0.75 19	3.88 99	7 3.2
1 25	5.00 127	4.21 107	5.56 141	2.05 52	1.00 25	4.25 108	8 3.6
1½ 40	6.50 165	4.85 123	7.81 198	2.55 65	1.50 38	5.00 127	15 7
2 50	7.00 178	5.44 138	10.38 264	2.89 73	2.0 51	6.00 152	24 11
2½ 65	7.50 191	6.97 177	11.9 302	3.25 83	2.5 64	7.00 178	44 20
3 80	8.00 203	7.38 188	11.9 302	3.77 96	3.0 76	7.50 191	52 24
4 100	9.00 229	10.33 262	20.0 508	4.52 115	4.0 102	9.00 229	90 41
6 150	15.50 394	12.56 319	26.0 660	6.24 159	6.0 152	11.00 279	196 89
8 200	18.00 457	13.06 332	— —	8.13 206	8.0 203	13.50 343	420 191
10 250	21.00 533	18.84 479	— —	10.50 267	10.00 254	16.00 406	762 346
12 300	24.00 610	22.59 574	— —	12.00 305	12.00 305	19.00 483	1140 518
14 350	27.00 686	24.22 615	— —	13.50 343	13.25 337	21.00 533	1632 740
16 400	30.00 762	24.13 613	— —	15.00 381	15.25 387	23.50 597	2112 958
18 450	34.00 864	27.28 693	— —	17.00 432	17.25 438	25.00 635	3100 1406
20 500	36.00 914	29.69 754	— —	18.00 457	19.25 489	27.50 699	3875 1758
24 600	42.00 1067	35.06 891	— —	21.00 533	23.25 591	32.00 813	4680 2123

SB-300 FULL PORT A	B	C	D	E	F	WEIGHT lb kg
5.50 140	3.49 89	5.31 135	2.06 52	0.50 13	3.75 95	6 3
6.00 152	4.09 104	5.56 141	2.55 65	0.75 19	4.63 118	10 4.5
6.50 165	4.21 107	5.56 141	2.61 66	1.00 25	4.88 124	12 5.4
7.50 191	4.85 123	7.81 198	2.92 74	1.50 38	6.13 156	23 10
8.50 216	5.44 138	10.38 264	3.83 97	2.00 51	6.50 165	32 15
9.50 241	6.97 177	11.9 302	4.00 102	2.50 64	7.50 191	56 26
11.12 283	7.38 188	11.9 302	5.30 135	3.00 76	8.25 210	76 35
12.00 305	10.33 262	20.00 508	5.99 152	4.00 102	10.00 254	124 56
15.87 403	12.56 319	26.00 660	6.65 169	6.00 152	12.50 318	254 116
19.75 502	13.06 332	— —	8.78 223	8.00 203	15.00 381	512 233
22.37 568	18.84 479	— —	11.19 284	10.00 254	17.50 446	952 433
25.50 648	22.59 574	— —	12.75 324	12.00 305	20.50 521	1564 709
30.00 762	24.22 615	— —	15.00 381	13.25 337	23.00 584	2300 1043
33.00 838	24.13 613	— —	16.50 419	15.25 387	25.50 648	3128 1419
36.00 914	27.28 693	— —	18.00 457	17.00 432	28.00 711	4250 1928
39.00 991	29.69 754	— —	19.50 495	19.00 483	30.50 775	5760 2613
45.00 1143	35.06 891	— —	22.50 572	23.00 584	36.00 914	6950 3152

SB-600 FULL PORT A	B	C	D	E	F	WEIGHT lb kg
— —	— —	— —	— —	— —	— —	— —
— —	— —	— —	— —	— —	— —	— —
— —	— —	— —	— —	— —	— —	— —
— —	— —	— —	— —	— —	— —	— —
11.50 292	7.44 189	11.90 302	5.00 127	2.00 51	6.50 165	64 29
— —	— —	— —	— —	— —	— —	— —
14.00 356	11.12 282	26.00 660	6.19 157	3.00 76	8.25 210	102 46
17.00 432	13.71 348	26.00 660	7.00 178	4.00 102	10.75 273	285 129
22.00 559	17.19 437	— —	9.25 235	6.00 152	14.00 356	640 290
26.00 660	19.26 489	— —	11.00 279	8.00 203	16.50 419	1020 463
31.00 787	21.16 537	— —	14.50 368	10.00 254	20.00 508	1650 748
33.00 838	22.41 569	— —	15.25 387	12.00 305	22.00 559	2450 1112

SIZE in mm	SB-150 REGULAR PORT A	B	C	D	E	F	WEIGHT lb kg
2 50	7.00 178	4.56 116	10.38 264	3.00 76	1.50 38	6.00 152	22 10
3 80	8.00 203	5.44 138	10.38 264	4.00 102	2.00 51	7.50 191	34 16
4 100	9.00 229	7.38 188	11.90 302	4.36 111	3.00 76	9.00 229	68 31
6 150	10.50 267	10.33 262	20.00 508	4.74 120	4.00 102	11.00 279	128 58
8 200	11.50 292	12.56 319	26.0 660	5.71 145	6.00 152	13.50 343	238 108
10 250	13.00 330	13.06 332	— —	6.37 162	8.00 203	16.00 406	470 214
12 300	14.00 356	18.84 479	— —	7.00 178	10.00 254	19.00 483	820 373
14 350	15.00 381	18.84 479	— —	7.50 191	10.00 254	21.00 533	1128 512
16 400	16.00 406	22.59 574	— —	8.00 203	12.00 305	23.50 597	1610 730
18 450	34.00 864	24.22 615	— —	17.00 432	14.00 356	25.00 635	2198 997
20 500	36.00 914	24.13 613	— —	18.00 457	15.25 387	27.50 699	2874 1304
24 600	42.00 1067	27.28 693	— —	21.00 533	17.25 438	32.00 813	3650 1656

SB-300 REGULAR PORT A	B	C	D	E	F	WEIGHT lb kg
8.50 216	4.56 116	10.38 264	3.88 98	1.50 38	6.50 165	28 13
11.13 283	5.44 138	10.38 264	5.56 141	2.00 51	8.25 209	52 24
12.00 305	7.38 188	11.90 302	5.99 152	3.00 76	10.00 254	98 45
15.88 403	10.33 262	20.00 508	7.94 202	4.00 102	12.50 318	182 88
16.50 419	12.56 319	26.00 660	8.25 210	6.00 152	15.00 381	356 162
18.00 457	13.06 339	— —	9.00 229	8.00 203	17.50 445	618 281
19.75 502	18.84 479	— —	9.13 232	10.00 254	20.50 521	1096 498
22.50 572	18.84 479	— —	11.25 286	10.00 254	23.00 584	1469 666
24.00 610	22.59 574	— —	12.00 305	12.00 305	25.50 648	2210 1002
26.00 660	24.22 615	— —	13.00 330	14.00 356	28.00 711	2600 1179
26.00 711	24.13 613	— —	14.00 356	15.25 387	30.50 778	3900 1769
32.00 813	27.28 693	— —	16.00 406	17.25 438	36.00 914	4600 2086

SB-600 REGULAR PORT A	B	C	D	E	F	WEIGHT lb kg
11.50 292	5.35 136	10.38 264	4.74 121	1.60 41	6.50 165	46 21
14.00 356	7.47 189	11.90 302	7.00 178	2.00 51	8.25 210	88 40
17.00 432	11.12 282	26.00 660	8.50 216	3.00 76	10.75 273	186 85
22.00 559	13.71 348	26.00 660	11.00 279	4.00 102	14.00 356	436 198
26.00 660	17.19 437	— —	13.00 330	6.00 152	16.50 419	830 377
31.00 787	19.26 489	— —	12.50 318	8.00 203	20.00 508	1150 522
33.00 838	21.16 537	— —	14.50 368	10.00 254	22.00 559	1680 762

SIZE in mm	SB-150 LIVE-LOADED (FULL PORT)(2) A	B	C	D	E	F	WEIGHT lb kg
2 50	7.00 178	7.90 201	10.38 264	2.89 73	2.00 51	6.00 152	30 14
3 80	8.00 203	10.32 262	11.90 302	3.77 96	3.00 76	7.50 191	58 26
4 100	9.00 229	13.94 354	20.00 508	4.52 115	4.00 102	9.00 229	97 44
6 150	15.50 394	16.84 428	26.00 660	6.24 159	6.00 152	11.00 279	212 96

SB-300 LIVE-LOADED (FULL PORT)(1) A	B	C	D	E	F	WEIGHT lb kg
8.50 216	7.90 201	10.38 264	3.83 97	2.00 51	6.50 165	45 20
11.12 283	10.32 262	11.90 302	5.30 135	3.00 76	8.25 210	82 37
12.00 305	13.94 354	20.00 508	5.99 152	4.00 102	10.00 254	137 62
15.87 403	16.84 428	26.00 660	6.65 169	6.00 152	12.50 318	278 126

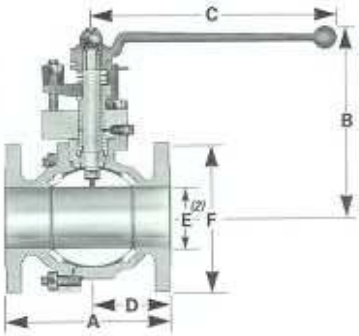

(1) For regular port and other sizes and pressure classes, contact the factory.

(2) Seat diameter.

HOW TO ORDER

The figure numbers shown on this key are designed to cover essential features of Velan valves. Please use figure numbers to ensure prompt and accurate processing of your order. A detailed description must accompany any special orders.

TYPE OF CONNECTION	SIZE OF CONNECTION*			MODEL NUMBER OR CLASS	PORT	TYPE	BODY MATERIAL			TRIM MATERIAL		SEAT/SEAL MATERIAL	SPECIAL SERVICE OR DESIGN
A	B			C	D	E	F			G		H	I
S	0	3	—	B	0	2	0	2	—	S	S	G	A

EXAMPLE: For ½" threaded HB-2000 reduced port valve in carbon steel body with stainless steel trim and glass-filled PTFE seat for standard service.

A TYPE OF CONNECTION

A – Special
B – Butt weld
C – Combination
F – Flanged, B16.5
R – Flanged, ring joint
S – Threaded
T – Studded (drilled and tapped)
W – Socket weld

B SIZE OF CONNECTION*

Customers have the choice of specifying valve size as part of the valve figure ("B") using the numbers below, or indicating valve size separately.

Examples: ½" **S-B0202-SSGA** (valve size is shown separately)
S03-B0202-SSGA (valve size is part of figure number)

01 – ¼" **05** – 1" **09** – 2½" **14** – 6" **19** – 14" **24** – 24"
02 – ⅜" **06** – 1¼" **10** – 3" **15** – 8" **20** – 16" **99** – Special
03 – ½" **07** – 1½" **12** – 4" **16** – 10" **21** – 18"
04 – ¾" **08** – 2" **13** – 5" **18** – 12" **22** – 20"

C MODEL NUMBER OR CLASS

For threaded or socket weld use model number:

A – VEE-600
B – HB-2000
C – EE-1000
D – EE-1500
F – OP-4000
G – TE-600
J – V3P-1000-ISO
K – V3P-1000
L – VOP-1000
M – VEE-2000
P – EP-2000
S – Special

For all flanged and butt weld 2½" and larger[1]

0 – 150 **1** – 300 **2** – 600

D PORT

0 – Reduced/regular port
1 – Full port
2 – Special port

E TYPE RESILIENT SEAT:

1 – End-entry (two-piece)
2 – Bar stock (one-piece)
3 – One-piece/Unibody
4 – Split-body
6 – Top-entry
8 – Three-piece valve

F BODY MATERIAL

01 – Special
02 – A105, WCB
03 – Chr. moly, F1, WC1
04 – Chr. moly, F5, C5
05 – Chr. moly, F11, WC6
06 – Chr. moly, F22, WC9
09 – Chr. moly, F9, C12
10 – Stainless steel, F316H
11 – Stainless steel, F304, CF8
12 – Stainless steel, F304L, CF3
13 – Stainless steel, F316, CF8M
14 – Stainless steel, F316L, CF3M
15 – Stainless steel, F347, CF8C
16 – Stainless steel, F304H
18 – Stainless steel, F321
19 – Monel
20 – Inconel
21 – Hastelloy
22 – Titanium
23 – Alloy 20
24 – LF1
25 – LCB
26 – LF2
27 – LF3/LC3
28 – F317
29 – F317L
31 – LCC
32 – Duplex stainless steel
34 – F91
35 – 254 SMO
38 – LC1
39 – LC2

G TRIM MATERIAL

CODE	BALL	STEM	CODE	BALL	STEM
AL	Aluminum	Aluminum	IN	Inconel	Inconel
AY	Alloy 20	Alloy 20	MO	Monel	Monel
BR	Brass CR plated	Brass	PR	SS 316-Cr plated	SS 630
CB	C 5	C 5	SB	SS 304	SS 304
CC	CS-CR plated	CS plated	SR	SS 316	SS 630
CN	CS-Ni plated	SS 316	SS	SS 316	SS 316[3]
CP	CS-CR plated	SS 316	SV	SS 317	SS 317
CT	C 12	C 12	TI	Titanium	Titanium
HC	Hastelloy C	Hastelloy C	XX	Special	Special

H SEAT MATERIAL

B – Bronze-filled PTFE
C – Carbon graphite reinforced PTFE
D – Carbon-filled nylon
E – Copolymer PTFE/PFA
F – FEP
G – Glass-reinforced PTFE
K – PFA
L – Delrin
M – Torlon
N – Reinforced nylon, Nylatron
P – PEEK + 30% glass
S – PPS
T – Teflon PTFE
U – UHMWPE
Z – Tefzel
X – Special

I SPECIAL SERVICE OR DESIGN[2]

A – Standard
B – Block & bleed
C – Chlorine
E – TE-600 Standard
F – Cavity filler
G – Oxygen
H – Cryogenic
I – NACE sour gas[3]
J – Vacuum
N – Nuclear
P – Powders
Q – API 6D
T – Bonnet, double packing
V – Bellows seal
X – Special
Z – Fire tested to API 607 Rev. 4 (graphite packing)

(1) Actual valve pressure-temperature ratings depend on choice of materials.
(2) If no special service or design is specified, use "A" for standard, except TE-150/300/600 use "E".
(3) Valves for NACE service, see page 37.