WAFER BUTTERFLY VALVES

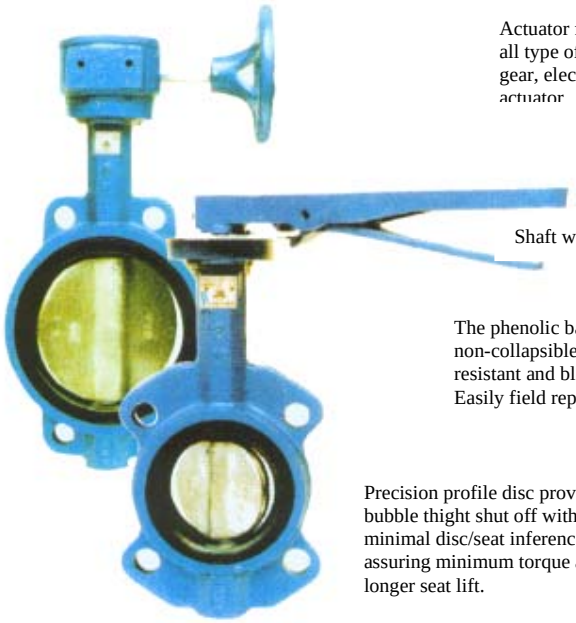

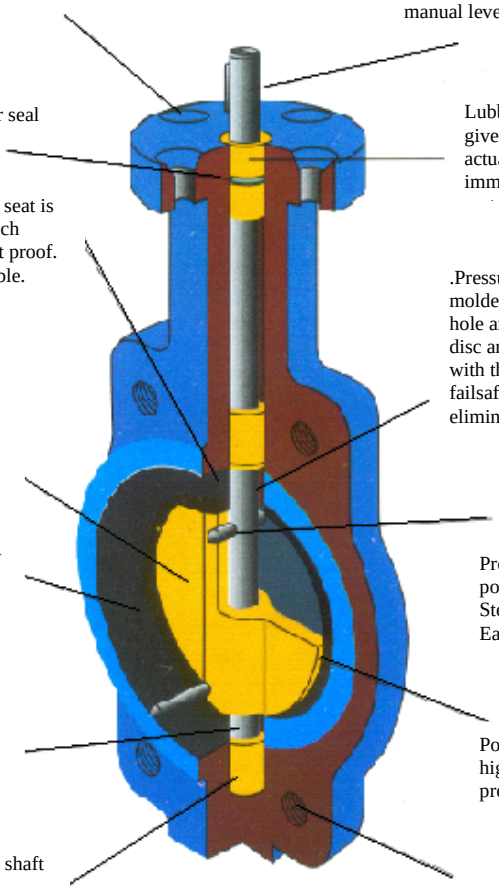

Actuator flange accomodate all type of operators; handle, gear, electric and pneumatic actuator

Strong precision key gives positive attachment for manual lever or actuator.

Shaft weather seal

Lubberized bronze bushings give the stem support at actuator mounting and immediately outboard of

The phenolic backed seat is non-collapsible, stretch resistant and blowout proof. Easily field replaceable.

.Pressure surge seals are molded inside the seat shaft hole area. These rings below disc are materially compatible with the seat to provide failsafe sealing around stem, eliminating possible leakage.

Precision profile disc provides bubble thight shut off with minimal disc/seat inference, assuring minimum torque and longer seat lift.

Valves available with both wafer and lug type bodies. Fully lined body in a broad range of materials including Teflon.

Precision taper pins ensure positive vibration proof. Stem to disc connection. Easily field replaceable.

One piece thru-stem design ensures dependability and positive

Polished disc flats to give a highly efficient seal; prevents leakage into the

Axial bearing prevents shaft overload.

Alignment features allow easy installation between pipeline flanges; a real installation cost saver.

- Body : Stainless Steel
- Disc : Stainless Steel
- Stem : Stainless Steel
- Seat :EPDM/NBR
- Bushing :PTFE

Material of Main Parts

Features

1. Small in size and light in weight. Easy installation and maintenance. It can be mour wherever needed.
2. Simple and compact construction, quick 90 degrees on-off operation. Minimized operation torque, energy saving.
3. Long service life. Standing the test of tens of thousands opening/closing operations.
4. Flow curve tending to straight line. Excellent regulation performance.
5. Bubbles-tight sealing with no leakage under the pressure test.
6. Wide selection of materials, applicable for various medium.

PERFORMANCE

DN Nominal Diameter		40mm(11/2")~1000mm(40")
PN Nominal Pressure		150 psi
Testing Pressure	Sealing	160 psi
	Body	220 psi
Working Temperature		-15~ = 150 °C
Suitable Mediums		Fresh water, Sewage, Sea water, Air, Steam Food, Medicine, Oils, Acids, Alkalis, Salts, etc

WAFER BUTTERFLY VALVE

Technical Performance

ARINDO VALVES

Application

Type “A” “LT” Wafer Butterfly Valve is produced based on advanced technology and equipment from foreign country. It is simple in design, excellent in performance and wide in application.

This product is ideal for throttling or shutting off the flow of corrosive or incorrossive gases, liquids, semi liquids and solid powder, and can be installed in pipelines or on vessels in industries of petroleum processing, chemicals, food, medicine, textile, paper making, hydroelectricity engineering, ship building, water supply and sewage, metallurgy, energy engineering as well as light industry, etc.

Features:

1. Small in size and light in weight. Easy installation and maintenance. It can be mounted wherever needed.
2. Simple and compact construction, quick 90 degrees on-off operation. Minimized operating torque, energy saving.
3. Long service life. Standing the test of tens of thousands opening closing operations.
4. Bubbles-tight sealing with no leakage under the pressure test.
5. Wide selection of materials, applicable for various medium.

Performance

DN Nominal diameter		40(1½")~1000(40")	50(2")~600(24")	mm(inch)
PN Nominal pressure		1.0	1.6	Mpa
Testing pressure	Sealing	1.1	1.76	
	Body	1.5	2.4	
Working temperature		-15~+150		°C
Suitable mediums		Fresh water, Sewage, Sea water, Air, Steam, Food, Medicine, Oils, Acids, Alkalis, Salts, etc.		

Materials of Main Parts

Body	Cast iron, Ductile iron, Stainless steel, Cooper alloy, Aluminium alloy.
Disc	Ductile iron, Stainless steel, Corrosion-resisting steel, Titanium steel, Cooper alloy.
Seat	NBR, EPDM, Neoprene, Hypalon, PTFE, Food-rubber, Fluoro-rubber, NR,etc.

ARINDO VALVES

JIS 10K IRON BUTTERFLY VALVE

Wafer type

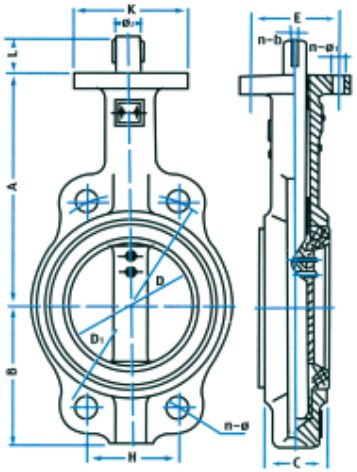

Rating

Media	Water, Oil		
Nominal Pressure (PN)	10 kgf/cm²		
Testing Pressure	Seat	Temperature	Normal
	10 kgf/cm²		≤ 150°C

No.	PARTS	MATERIALS
1.	Body	Stainless Steel
2.	Disc	Stainless Steel
3.	Stem	Stainless Steel
4.	Seat	EPDM/NBR
5.	Bushing	PTFE

DIMENSIONS

Size	inch	1 1/2	2	2 1/2	3	4	5	6	8	10	12	14	16	18	20	24	28	32	36	40
	mm	40	50	65	80	100	125	150	200	250	300	350	400	450	500	600	700	800	900	1000
A		110	161	175	181	200	213	226	260	292	337	368	400	422	480	562	629	666	722	800
B		65	80	89	95	114	127	139	175	203	242	267	301	327	361	459	527	594	653	718
C		32	40	45	45	54	60	60	63	66	78	80	90	105.6	131.8	152	165	190	205	218
D		40	51	62.8	77.3	102.7	121.8	154.5	200.9	248.9	299.9	331.7	387.5	438.4	489	590.1	691.7	792.1	861	961
L		32	32	32	32	32	32	32	45	45	45	45	52	52	64	76	66	66	130	130
H		77.78	84.85	96.2	113.14	70.8	82.28	91.08	112.89	92.4	105.34	91.11 121.64	100.48 102.43	88.39 91.52	96.98 101.68	113.42 120.45	109.65	124	117.57	129.89
D1		110	120	136.2	160	185	218	238	295	357	407	467 470	515 525	565 585	620 650	725 770	840	950	1050	1160
n-ø		4-ø18	4-ø23	4-ø26.5	8-ø18	4-ø24.5	4-ø23	4-ø25	4-ø25	4-ø29	4-ø29	4-ø30	4-ø26	4-ø26	4-ø26	20-ø30	24-ø30	24-ø33	28-ø33	28-ø33
K		77	77	77	77	92	92	92	115	115	140	140	197	197	197	276	308	308	310	310
E		57.15	57.15	57.15	57.15	69.85	69.85	69.85	88.9	88.9	107.95	107.95	158.75	158.75	158.75	215.9	254	254	254	254
n-ø1		4-ø6.7	4-ø6.7	4-ø6.7	4-ø6.7	4-ø10.3	4-ø10.3	4-ø10.3	4-ø14.3	4-ø14.3	4-ø14.3	4-ø14.3	4-ø20.6	4-ø20.6	4-ø20.6	4-ø22.2	8-ø18	8-ø18	8-ø18	8-ø18
ø2		10	12.7	12.7	12.7	15.8	19.05	19.05	22.2	28.6	31.8	31.8	33.34	38	41.15	50.56	55	55	75	85
n-b		1-2.5	1-3	1-3	1-3	1-5	1-5	1-5	1-5	1-8	1-8	1-8	1-10	1-10	2-10	2-16	2-16	2-16	2-20	2-22
Weight(kg)		2.8	3.25	4.0	4.2	5.2	8.0	9.0	16.0	33.00	47	55	108							

JIS 10K CAST IRON

ARINDO VALVES

BUTTERFLY VALVE

Wafer type

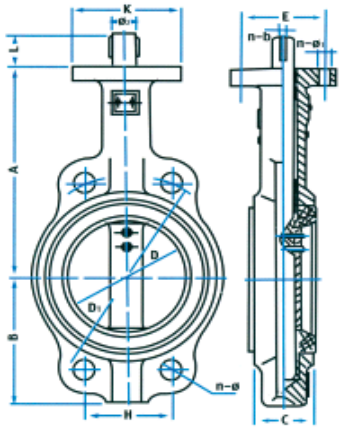

Rating

Media		Water, Oil	
Nominal Pressure (PN)		10 kgf/cm²	
Testing Pressure	Seat	Temperature	Normal
	10 kgf/cm²		≤ 150°C

No.	PARTS	MATERIALS
1.	Body	Stainless Steel
2.	Disc	Stainless Steel (Pinless Design)
3.	Stem	Stainless Steel
4.	Seat	EPDM/NBR (changeable seat)
5.	Bushing	PTFE

DIMENSIONS

Size	inch	1 1/2	2	2 1/2	3	4	5	6	8	10	12	14	16	18	20	24	28	32	36	40
	mm	40	50	65	80	100	125	150	200	250	300	350	400	450	500	600	700	800	900	1000
A		110	161	175	181	200	213	226	260	292	337	368	400	422	480	562	629	666	722	800
B		65	80	89	95	114	127	139	175	203	242	267	301	327	361	459	527	594	653	718
C		32	40	45	45	54	60	60	63	66	78	80	90	105.6	131.8	152	165	190	205	218
D		40	51	62.8	77.3	102.7	121.8	154.5	200.9	248.9	299.9	331.7	387.5	438.4	489	590.1	691.7	792.1	861	961
L		32	32	32	32	32	32	32	45	45	45	45	52	52	64	76	66	66	130	130
H		77.78	84.85	96.2	113.14	70.8	82.28	91.08	112.89	92.4	105.34	91.11 121.64	100.48 102.43	88.39 91.52	96.98 101.68	113.42 120.45	109.65	124	117.57	129.89
D1		110	120	136.2	160	185	218	238	295	357	407	467 470	515 525	565 585	620 650	725 770	840	950	1050	1160
n-ø		4-ø18	4-ø23	4-ø26.5	8-ø18	4-ø24.5	4-ø23	4-ø25	4-ø25	4-ø29	4-ø29	4-ø30	4-ø26	4-ø26	4-ø26	20-ø30	24-ø30	24-ø33	28-ø33	28-ø33
K		77	77	77	77	92	92	92	115	115	140	140	197	197	197	276	308	308	310	310
E		57.15	57.15	57.15	57.15	69.85	69.85	69.85	88.9	88.9	107.95	107.95	158.75	158.75	158.75	215.9	254	254	254	254
n-ø1		4-ø6.7	4-ø6.7	4-ø6.7	4-ø6.7	4-ø10.3	4-ø10.3	4-ø10.3	4-ø14.3	4-ø14.3	4-ø14.3	4-ø14.3	4-ø20.6	4-ø20.6	4-ø20.6	4-ø22.2	8-ø18	8-ø18	8-ø18	8-ø18
ø2		10	12.7	12.7	12.7	15.8	19.05	19.05	22.2	28.6	31.8	31.8	33.34	38	41.15	50.56	55	55	75	85
n-b		1-2.5	1-3	1-3	1-3	1-5	1-5	1-5	1-5	1-8	1-8	1-8	1-10	1-10	2-10	2-16	2-16	2-16	2-20	2-22
Weight(kg)		2.8	3.25	4.0	4.2	5.2	8.0	9.0	16.0	33.00	47	55	108							

ARINDO VALVES

BUTTERFLY VALVE

Overall & Connection Dimensions of Type “A” Wafer Butterfly Valve

Size DN		A	B	C	D	L	H	D1	n-ø1	ø2	n-b
(mm)	(inch)										
40	1½"	110	65	99	40	32	78	110	4-ø6,7	10	1-2,5
50	2"	161	80	42	51	32	85	120	4-ø6,7	13	1-3
65	2½"	175	89	45	63	32	96	136	4-ø6,7	13	1-3
80	3"	181	95	45	77	32	113	160	4-ø6,7	13	1-3
100	4"	200	114	52	103	32	71	185	4-ø10,3	16	1-5
125	5"	213	127	54	122	32	82	218	4-ø10,3	19	1-5
150	6"	226	139	56	155	32	91	238	4-ø10,3	19	1-5
200	8"	260	175	61	201	45	113	295	4-ø14,3	22	1-5
250	10"	292	203	66	249	45	92	357	4-ø14,3	29	1-8
300	12"	337	242	77	300	45	105	407	4-ø14,3	32	1-8
350	14"	368	267	77	332	45	91,11/121,64	467/470	4-ø14,3	32	1-8
400	16"	400	301	87	388	45	100,48/102,43	515/525	4-ø20,6	33	1-10
450	18"	422	327	106	438	52	88,39/91,52	565/585	4-ø20,6	38	1-10
500	20"	480	361	132	489	64	96,98/101,68	620/650	4-ø20,6	41	1-10
600	24"	562	459	152	590	76	113,42/120,45	725/770	4-ø22,2	51	2-16
700	28"	629	527	165	692	66	110	840	8-ø18	55	2-16
800	32"	666	594	190	792	66	124	950	8-ø18	55	2-16
900	36"	722	653	205	861	130	118	1050	8-ø18	75	2-20
1000	40"	800	718	218	961	130	130	1160	8-ø18	85	2-22

Note:

The DNA40(1½”)~1000(40”) Type “A” butterfly valves are suitable for pressure of 10 bar and 16 bar grade separately. Dimensions separated by “-“ in table show the connection dimmension that is upper one is for 10 bar and 16 bar. DN700(28”)~1000(40”) Type “A” butterfly valve are suitable for the pressure of 10 bar grade. Upper flanges of valves are suitable for all types of valves fitted with electric, worm gear, manual and pneumatic actuators. The connection dimensions of side flanges are accordance with standard dimensions from each country.