ARINDO VALVES

# 1000 WOG BALL VALVE

## Stainless Steel 1-pc body, PTFE seat
## Reduced Bore, Screwed BSPT

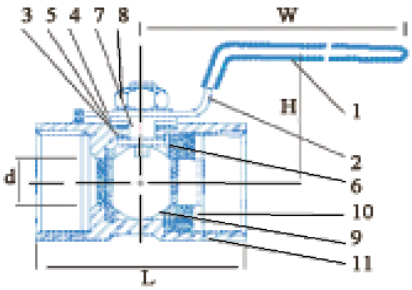


Rating

| | |
|---|---|
| Media | Water, Oil, Gas |
| Nominal Pressure (PN) | 63 kgf/cm² |
| Temperature | Normal |
| | ≤ 120°C |

Test Pressure:

| | |
|---|---|
| Body | 1200 psi (Hydrostatic) |
| Seat | 150 psi (Air) |

| No. | Parts | Materials |
|---|---|---|
| 1. | Plastic Covers | Plastic |
| 2. | Handle | SUS 304 |
| 3. | Thrust Washer | PTFE |
| 4. | Packing Ring | SUS 304 |
| 5. | Stem Packing | PTFE |
| 6. | Seat | PTFE |
| 7. | Stem | SUS 316 |
| 8. | Stem Nut | SUS 304 |
| 9. | Ball | ASTM-A351 CF8M |
| 10. | Cap | SUS 316 ASTM-A351 |
| 11. | Body | ASTM-A351 CF8M |

Dimensions mm

| Size | Inch | 1/4 | 3/8 | 1/2 | 3/4 | 1 | 1 1/4 | 1 ½ | 2 |
|---|---|---|---|---|---|---|---|---|---|
| | mm | 6 | 10 | 15 | 20 | 25 | 32 | 40 | 50 |
| L | | 42 | 44 | 56 | 59 | 72 | 77 | 82 | 98 |
| H | | 32 | 36 | 42 | 45 | 50 | 54 | 65 | 72 |
| W | | 80 | 80 | 92 | 92 | 105 | 105 | 129 | 129 |
| Weight(kg) | | 0.1 | 0.1 | 0.2 | 0.3 | 0.4 | 0.6 | 0.8 | 1.4 |
| Bore size | | 4.6 | 6.8 | 9.2 | 12.5 | 15 | 20 | 25 | 32 |

# CARBON STEEL BALL VALVE

## Reduced Bore, Screwed BSPT

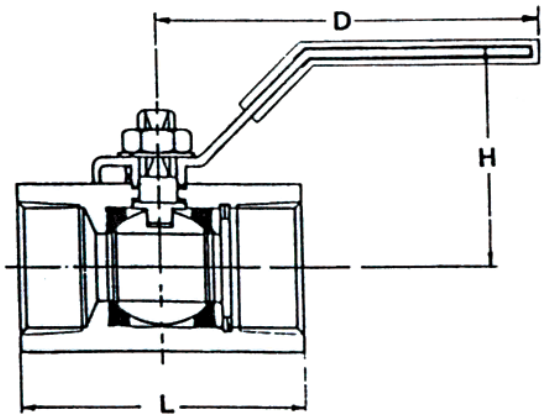


Test Pressure:

| | |
|---|---|
| Body | 1000 psi (Hydrostatic) |
| Seat | 100 psi (Air) |

| No. | Parts | Materials |
|---|---|---|
| 1. | Body | Carbon Steel (WCB) |
| 2. | Ball | SUS 304 |
| 3. | Stem | SUS 304 |
| 4. | Seat | R-PTFE |
| 5. | Gland Ring | SUS 304 |
| 6. | Seat Retainer | SUS 304 |
| 7. | Ring | SUS 304 |
| 8. | Nut | Carbon Steel |
| 9. | Washer | Carbon Steel |
| 10. | Handle | Carbon Steel |

Dimensions mm

| SIZE | inch | 1/2 | 3/4 | 1 | 1 1/4 | 1 1/2 | 2 |
|---|---|---|---|---|---|---|---|
| | mm | 15 | 20 | 25 | 32 | 40 | 50 |
| Bore Size | | 10 | 13 | 17 | 22 | 25 | 32 |
| L | | 57 | 59 | 71 | 78 | 83 | 100 |
| H | | 51 | 55 | 56 | 68 | 68 | 78 |
| D | | 108 | 108 | 108 | 146 | 150 | 176 |
| torque kgf/cm | | 40 | 45 | 50 | 110 | 125 | 140 |
| Weight (kg) | | 0.2 | 0.3 | 0.5 | 0.8 | 1.0 | 1.5 |

# CHROME PLATED BRASS BALL VALVE

## 2pc body class 400WOG, Screwed BSPT

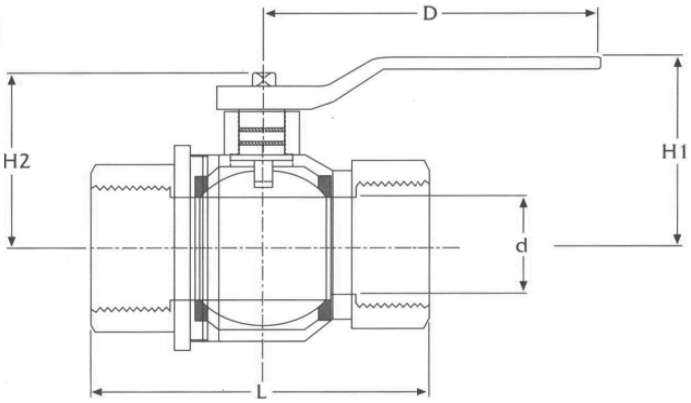


| No. | Parts | Materials |
|---|---|---|
| 1. | Body | Chromed Forged Brass |
| 2. | Cap | Chromed Forged Brass |
| 3. | Stem | Brass Rod |
| 4. | Ball | Chromed Forged Brass |
| 5. | Handle | Chromed Carbon Steel |
| 6. | Handle Nut | Chromed Carbon Steel |
| 7. | Washer | Chromed Carbon Steel |
| 8. | Ball Seat | PTFE |
| 9. | O-Ring | Synthetic Rubber |

Test Pressure

| | |
|---|---|
| Working Pressure | 25 kgf/cm2 (400 psi) |
| Hydrostatic shell test | 4.12 Mpa (42 kgf/cm$^2$) |
| Pneumatic seat test | 0.59 Mpa (6 kgf/cm$^2$) |

Dimensions mm

| Size | inch | 1/4 | 3/8 | 1/2 | 3/4 | 1 | 1 1/4 | 1 1/2 | 2 | 2 1/2 | 3 | 4 |
|---|---|---|---|---|---|---|---|---|---|---|---|---|
| | mm | | | 15 | 20 | 25 | 32 | 40 | 50 | 65 | 80 | 100 |
| d | | 10 | 10 | 14 | 18 | 22 | 30 | 37 | 47 | 58 | 70 | 86 |
| D | | 86 | 86 | 78 | 96 | 120 | 120 | 139 | 161 | 249 | 249 | 249 |
| L | | 39 | 39 | 49 | 55 | 66 | 74 | 82 | 100 | 125 | 144 | 169 |
| H1 | | 33 | 37 | 38 | 46 | 54 | 54 | 65 | 87 | 112 | 124 | 133 |
| H2 | | 32 | 32 | 35 | 40 | 47 | 50 | 60 | 77 | 98 | 111 | 119 |
| Weight (kg) | | 0.1 | 0.15 | 0.2 | 0.25 | 0.35 | 0.5 | 0.75 | 2.0 | 2.6 | | |

# 600 WOG BALL VALVE

## Brass 2-pc body, Class 600 WOG, Full Bore, Screwed to BSPT

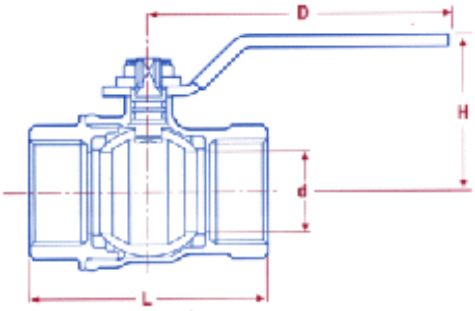


Rating

| | | | |
|---|---|---|---|
| Media | | Water, Oil, Gas | |
| Nominal Pressure (PN) | | 40 kgf/cm² | |
| Testing Pressure | Seat | Temperature | Normal |
| | 6 kgf/cm² | | ≤ 120°C |

| No. | Parts | Materials |
|---|---|---|
| 1. | Body | Forged brass |
| 2. | Body Cap | Forged brass |
| 3. | Stem | Brass rod |
| 4. | Ball | Forged brass |
| 5. | Handle | Carbon steel |
| 6. | Handle Nut | Carbon steel |
| 7. | Washer | Carbon steel |
| 8. | Ball seat | PTFE |
| 9. | O-ring | FPM |
| 10. | Thrust Washer | PTFE |

Dimensions mm

| SIZE | inch | ¼ | ⅜ | ½ | ¾ | 1 | 1¼ | 1½ | 2 |
|---|---|---|---|---|---|---|---|---|---|
| | mm | 8 | 10 | 15 | 20 | 25 | 32 | 40 | 50 |
| H | | 36 | 36 | 39 | 44 | 49 | 55 | 65 | 73 |
| D | | 80 | 80 | 80 | 100 | 130 | 130 | 150 | 150 |
| L | | 40 | 41 | 49 | 56 | 65 | 76 | 87 | 103 |
| Weight(kg) | | - | - | 0,2 | 0,3 | 0,6 | 0.7 | 1 | 1.5 |

ARINDO VALVES

# PN 16 LOCKABLE BALL VALVE

## Model: ALV-S-PN16

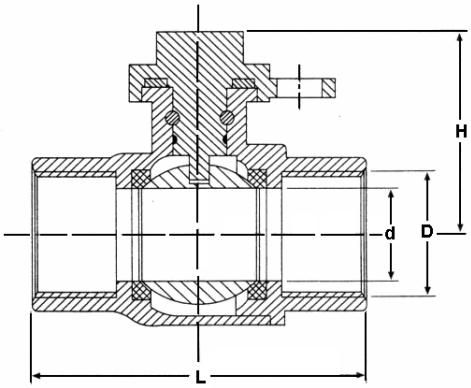


| No. | Parts | Q'TY | ASTM Materials | |
|---|---|---|---|---|
| | | | Forged Brass | CF8 |
| 1. | Body | 1 | Forged Brass | A 351 GR. CF8 |
| 2. | Cap | 1 | Forged Brass | A 351 GR. CF8 |
| 3. | Stem | 1 | Forged Brass | A 351 GR. CF8 |
| 4. | Ball | 1 | Chromed Forged Brass | A 351 GR. CF8 |
| 5. | Ball Seat | 2 | PTFE | PTFE |
| 6. | O-ring | 3 | Synthetic Rubber | Synthetic Rubber |

**Features**

| |
|---|
| Threaded ends to BSPT or NPT |
| Face to face or end to end: ARITA Standard |
| Wall Thickness: ARV Standard |
| Application: Water, Oil, Gas, and Steam |

Test Pressure

| | | |
|---|---|---|
| Hydrostatic shell test | 3.24 Mpa | (33 kgf/cm²) |
| Hydrostatic seat test | 2.37 Mpa | (24.2 kgf/cm²) |
| Pneumatic seat test | 0.59 Mpa | (6 kgf/cm²) |

| SIZE | | d | D | H | L | Weight (kg) | |
|---|---|---|---|---|---|---|---|
| | | | | | | Forged Brass | SUS 304 |
| inch | 3/4 | 20 | 25 | 45 | 68 | 0.420 | 0.350 |
| mm | 20 | | | | | | |

# 1000 WOG BALL VALVE

## Stainless Steel 3-pc body, PTFE seat
## Full Bore, Screwed BSPT

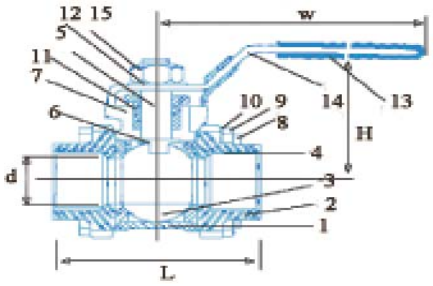


| No. | Parts | Materials |
|---|---|---|
| 1. | Body | SUS 316 |
| 2. | Cap | SUS 316 |
| 3. | Ball | SUS 316 |
| 4. | Seat | PTFE |
| 5. | Stem | SUS 316 |
| 6. | Thrust Washer | PTFE |
| 7. | Stem Packing | PTFE |
| 8. | Bolt | SUS 304 |
| 9. | Hex Nut | SUS 304 |
| 10. | Spring Washer | SUS 304 |
| 11. | Gland Nut | SUS 304 |
| 12. | Spring Washer | SUS 304 |
| 13. | Stem Nut | SUS 304 |
| 14. | Handle | SUS 304 |
| 15. | Plastic Cover | Plastic |

Rating

| | |
|---|---|
| Media | Water, Oil |
| Nominal Pressure (PN) | 63 kgf/cm² |
| Temperature | Normal |
| | ≤ 120°C |

Test Pressure

| | |
|---|---|
| Body | 1200 psi (Hydrostatic) |
| Seat | 150 psi (Air) |

Dimensions mm

| Size | inch | 1/4 | 3/8 | 1/2 | 3/4 | 1 | 1 1/4 | 1 1/2 | 2 | 2 1/2 | 3 | 4 |
|---|---|---|---|---|---|---|---|---|---|---|---|---|
| | mm | 6.8 | 9.2 | 15 | 20 | 25 | 32 | 40 | 50 | 65 | 76 | 100 |
| L | | 72 | 72 | 72 | 80 | 86 | 107 | 120 | 133 | 171 | 188 | 226 |
| H | | 48 | 48 | 50 | 57 | 69 | 73 | 83 | 92 | 150 | 161 | 180 |
| W | | 105 | 105 | 105 | 130 | 145 | 145 | 190 | 190 | 251 | 251 | 251 |
| Weight(kg) | | 0.2 | 0.3 | 0.5 | 0.8 | 1.1 | 1.7 | 2.8 | 3.6 | 7.4 | 10.2 | 22 |

# STAINLESS STEEL BALL VALVES

## 3pc body class 1000

B2238

FEATURES:
-Investment Castings for Body and End Caps
-Blow-out Proof Stem
-Various Thread Standards Available
-Full Port

STANDARDS:
-Design: ASME B16.34, API 608
-Pipe Thread KV-030:
ASME B1.20.1, BS21
DIN 2999/259, BSPT
-Butt Weld KV-031: ASME B16.25
-Socket Weld KV-032: ASME B16.11
-Flange End KV-03F: ASME B16.5, DIN 2542~2545, JIS

-Inspection & Testing: API 598

SPECIFICATIONS:
-Working Pressure: 1000 psi at 100ºF (38ºC)
-Temperature Range: -50ºF to 350ºF (-46ºC to 177ºC)

| No. | Parts | Materials |
|---|---|---|
| 1. | Body | A351-CF8M |
| 2. | Cap | A351-CF8M |
| 3. | Ball | A351-CF8M |
| 4. | Ball Seat | RPTFE |
| 5. | Stem | A276-316 |
| 6. | Body Gasket | RPTFE |
| 7. | Bolt | SUS 304 |
| 8. | Thrust Washer | RPTFE |
| 9. | Lock Device | SUS 304 |
| 10. | Handle | SUS 304 |
| 11. | Handle Sleeve | Vinyl Plastic |
| 12. | Stem Nut | SUS 304 |
| 13. | Stem Washer | SUS 304 |
| 14. | Gland Nut | SUS 304 |
| 15. | Stem Packing | PTFE |
| 16. | Bolt Washer | SUS 304 |
| 17. | Bolt Nut | SUS 304 |

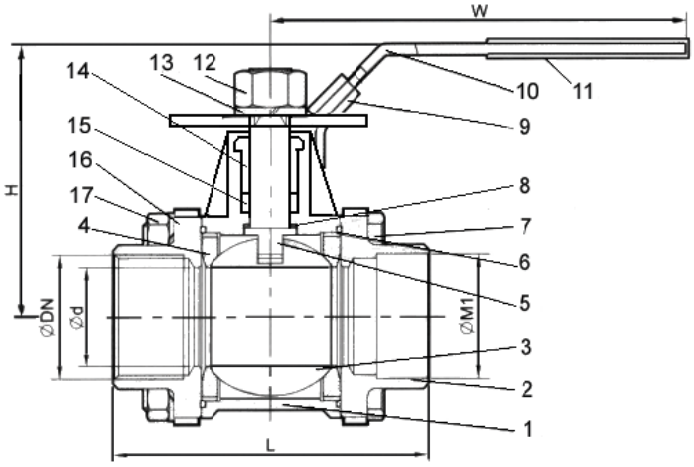


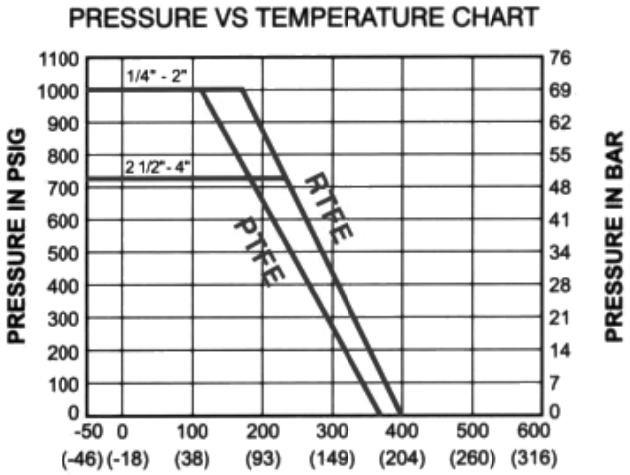


| SIZE | ød | L | H | W | Ød | øC | øR | øM | øM1 | Weight | øDN |
|---|---|---|---|---|---|---|---|---|---|---|---|
| 1/4" | 10.6 | 61.2 | 57.5 | 100.0 | Non | non | non | non | 14.1 | | |
| 3/8" | 12.0 | 65.2 | 57.5 | 100.0 | Non | non | non | non | 18.0 | | NPT |
| 1/2" | 15.0 | 72.4 | 57.5 | 100.0 | 95.0 | 65.0 | 45.0 | 14.0 | 22.0 | 0.60 | |
| 3/4" | 20.0 | 81.0 | 63.0 | 129.0 | 105.0 | 75.0 | 58.0 | 14.0 | 27.3 | 0.85 | BSPT |
| 1" | 25.0 | 85.0 | 75.5 | 156.0 | 115.0 | 85.0 | 68.0 | 14.0 | 34.0 | 1.25 | |
| 1 1/4" | 32.0 | 107.0 | 81.0 | 156.0 | 140.0 | 100.0 | 78.0 | 18.0 | 42.8 | 1.90 | PT |
| 1 1/2" | 38.0 | 114.0 | 94.0 | 182.5 | 150.0 | 110.0 | 88.0 | 18.0 | 48.9 | 2.70 | |
| 2" | 50.0 | 132.0 | 104.5 | 182.5 | 165.0 | 125.0 | 102.0 | 18.0 | 61.4 | 4.00 | DIN |
| 2 1/2" | 63.5 | 171.5 | 131.0 | 250.0 | 185.0 | 145.0 | 122.0 | 18.0 | 74.0 | 8.30 | |
| 3" | 76.0 | 192.6 | 139.0 | 250.0 | 200.0 | 160.0 | 138.0 | 18.0 | 90.0 | | etc… |
| 4" | 100.0 | 224.0 | 173.0 | 280.0 | 235.0 | 190.0 | 162.0 | 22.0 | 115.7 | | |

# STAINLESS STEEL BALL VALVES

## 3way body class 1000WOG

SERIES: KV-L50

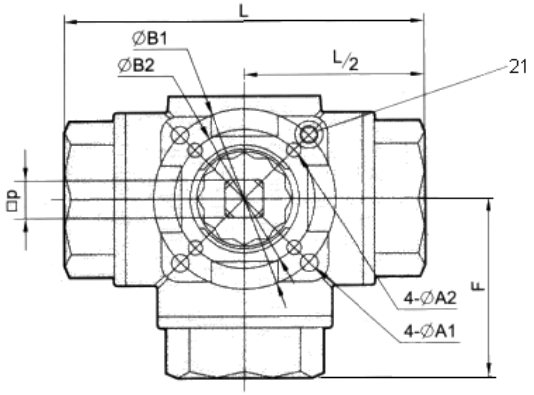


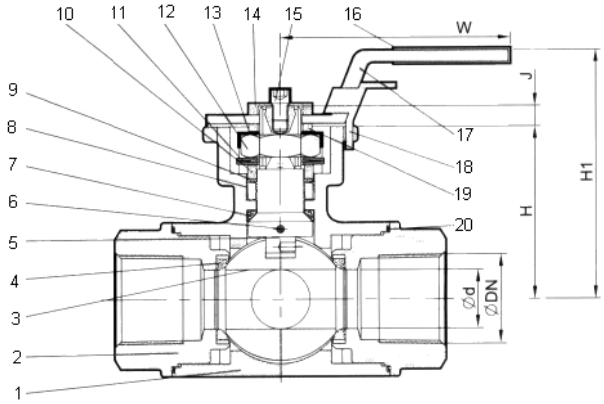


FEATURES:
-ISO 5211 Mounting pad
-Square Stem for Direct Mount with Actuator
-Double Stem Sealing to Meet TUV TA-LUFT Requirements
-Pre-load 2 Belleville
-PED 91/23/EC (CE 0036) Approved
-Casting Approved TUV AD-WO/TRD100
-L or T Port Options
-4 Seats for Rigid Ball Supporting

SPECIFICATIONS:
-Reduced port
-Full port are available
-Size available from ¼" to 2"
-Pressure rating: 1000WOG (Class 400), PN64

PRESSURE VS TEMPERATURE CHART

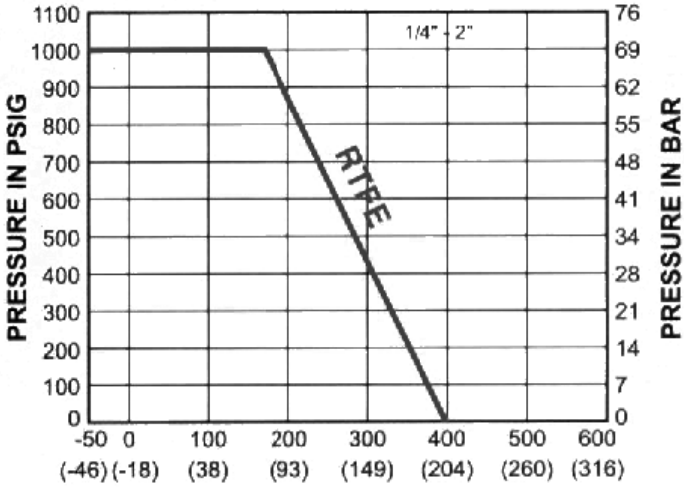

ARINDO VALVES

FEATURES:
-Investment Castings for Body and End caps
-Various Thread Standards are Available
-Built-in ISO 5211 Mounting Pad for Easy Automation
-Anti-static Devices for Ball-stem-body
-Blow-out Proof Stem
-Double Stem Sealing to Comply with TA-LUFT Requirements
-Positive Position Location at 90º Increments
-Locking in Every 90º Increments

STANDARDS;
-Design: ASME B16.34, API 608
-Wall Thickness: ASME B1.20.1, BS21
DIN 2999/259, BSPT
-Pipe Thread: ASME B1.20.1, BSPT
DIN 2999/259, BSPT
-Inspection & Testing: API 598

SPECIFICATIONS:
-Working Pressure: 1000 psig at 100ºF (38ºC)
-Temperature Range: -50ºF to 350ºF (-46ºC to 177ºC)

| No. | Parts | Materials |
|---|---|---|
| 1. | Body | A351-CF8M |
| 2. | End Cap | A351-CF8M |
| 3. | Ball | A351-CF8M |
| 4. | Ball Seat | RPTFE |
| 5. | Stem | A276-316 |
| 6. | Anti-static | SUS 316 |
| 7. | Stem seat-ring | PTFE |
| 8. | V-ring Packing | PTFE |
| 9. | Bushing | 50%SS + 50%PTFE |
| 10. | Gland | SUS 304 |
| 11. | Belleville Washer | SUS 301 |
| 12. | Stem Nut | SUS 304 |
| 13. | Stop-lock-cap | SUS 304 |
| 14. | Washer | SUS 304 |
| 15. | Handle Nut | SUS 304 |
| 16. | Handle Sleeve | Vinyl plastic |
| 17. | Handle | SUS 304 |
| 18. | Lock Device | SUS 304 |
| 19. | Handle Gland | SUS 304 |
| 20. | Body Gasket | PTFE |
| 21. | Stop Bolt | SUS 304 |

**FLOW PATTERNS FOR 3-WAY VALVES**

L-PORT 90 TURN

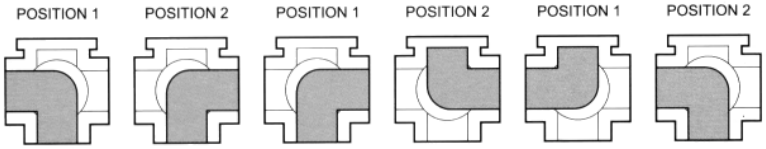


FLOWPLAN A FLOWPLAN B FLOWPLAN C

T-PORT 90 TURN

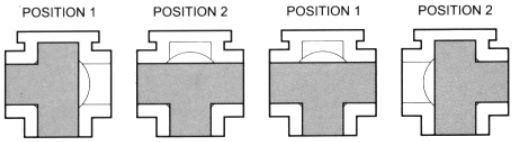


FLOWPLAN A FLOWPLAN B

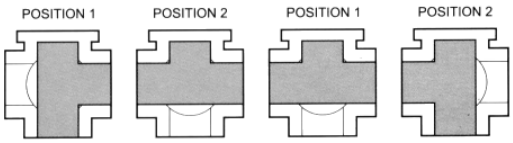


FLOWPLAN A FLOWPLAN B

| SIZE | ød | L | H | H1 | W | øB1 | øB2 | øA1 | øA2 | P | Weight | øDN |
|---|---|---|---|---|---|---|---|---|---|---|---|---|
| 1/4" | 11.0 | 79.0 | 42.0 | 70.0 | 160.0 | 42.0 | 36.0 | 5.5 | 5.5 | 9.0 | | |
| 3/8" | 11.0 | 79.0 | 42.0 | 70.0 | 160.0 | 42.0 | 36.0 | 5.5 | 5.5 | 9.0 | | NPT |
| 1/2" | 11.0 | 76.0 | 42.0 | 70.0 | 160.0 | 42.0 | 36.0 | 5.5 | 5.5 | 9.0 | 0.65 | |
| 3/4" | 15.0 | 86.0 | 49.0 | 77.0 | 160.0 | 42.0 | 36.0 | 5.5 | 5.5 | 9.0 | 1.00 | BSPT |
| 1" | 20.0 | 100.0 | 59.0 | 87.0 | 175.0 | 50.0 | 42.0 | 5.5 | 5.5 | 11.0 | 1.60 | |
| 1 1/4" | 25.0 | 124.0 | 65.0 | 93.0 | 175.0 | 50.0 | 42.0 | 5.5 | 5.5 | 11.0 | | PT |
| 1 1/2" | 32.0 | 126.0 | 73.2 | 103.0 | 245.0 | 70.0 | 50.0 | 8.5 | 6.5 | 14.0 | 3.50 | |
| 2" | 40.0 | 146.0 | 82.5 | 113.0 | 245.0 | 70.0 | 50.0 | 8.5 | 6.5 | 14.0 | 5.35 | DIN |

# CAST IRON BALL VALVE

## Full Bore, Flanged to JIS 10K

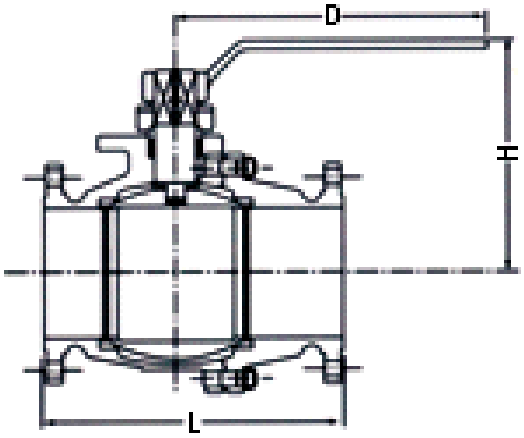


Rating

| | | | |
|---|---|---|---|
| Media | | Water, Oil | |
| Nominal Pressure (PN) | | 10 kgf/cm² | |
| Testing Pressure | Seat | Temperature | Normal |
| | 15.4 kgf/cm² | | ≤ 120°C |

**Pressure Loss vs. Flow Rate**

Full Bore Valves

Pressure Loss (psi)

Flow in gallons per minute (gpm)

| No. | Parts | Materials |
|---|---|---|
| 1. | Body | FC200 |
| 2. | Cap | FC200 |
| 3. | Stem | SUS304 |
| 4. | Ball | SCS13A |
| 5. | Gland | FC200 |
| 6. | Gland Packing | PTFE |
| 7. | Ball Seat | PTFE |
| 8. | Gasket | PTFE |
| 9. | Thrust Washer | PTFE |
| 10. | Handle | FC200 |

Dimensions mm

| SIZE | Inch | ½ | ¾ | 1 | 1¼ | 1½ | 2 | 2½ | 3 | 4 | 5 | 6 | 8 | 10 |
|---|---|---|---|---|---|---|---|---|---|---|---|---|---|---|
| | mm | 15 | 20 | 25 | 32 | 40 | 50 | 65 | 80 | 100 | 125 | 150 | 200 | 250 |
| L | | 110 | 120 | 130 | 140 | 165 | 180 | 190 | 200 | 225 | 300 | 340 | 450 | 533 |
| H | | 70 | 90 | 100 | 110 | 130 | 130 | 170 | 180 | 190 | 250 | 280 | 350 | 400 |
| D | | 140 | 140 | 140 | 140 | 230 | 230 | 350 | 350 | 350 | 670 | 670 | 1000 | 1000 |
| Weight(kg) | | - | - | 4.2 | - | 7.2 | 9.2 | 13.1 | 19 | 24.0 | 42.0 | 47.2 | 120 | 200 |

ARINDO VALVES

# STAINLESS STEEL BALL VALVES

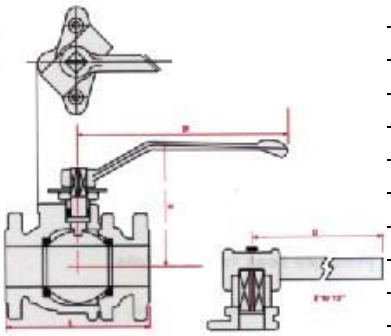

| Parts | SB-1K | SB-2K |
|---|---|---|
| Body | SCS13 | SCS14 |
| Body Cap | SCS13 | SCS14 |
| Ball | SCS13 | SCS14 |
| Stem | SCS13 | SCS14 |
| Seat | PTFE | PTFE |
| Gland | SCS13 | SCS14 |
| Packing | PTFE | PTFE |
| Gasket | PTFE | PTFE |
| Cap. Nut/Bolt | SCS13 | SCS14 |
| Gland Bolt | S45C | |
| Handle | DUCTILE IRON | |

## SPECIFICATION:

- Wall thickness : ANSI B16.34
- F-F dimensions : ANSI B16.10
- End Flanges : ANSI 16.50
- Temperature Range : -60 to 450ºF

MODEL: SB-1K (SUS 304)
: SB-2K (SUS316)

FULL BORE JIS10K

One of the best advantages of ball valves is that every flow per any given bore size is larger than other types of valves. Fluid is much less disturbed by eddy currents or pulsation. To obtain the figure of flow per valve opening, simply multiply the flow rate (%) given here by the corresponding value given in the table of Pressure loss vs. Flow Rate.

| Service temperature °C (°F) | | | Class: 10K<br>Sizes ½" to 12" |
|---|---|---|---|
| 120°C (248) non-shock water | | | 14 kgf/cm² |
| 120°C (248) oil, water, air | | | 10 kgf/cm² |
| Saturated steam | | | 7 kgf/cm² |
| Test Pressure | Hydrostatic | Shell | 21 kgf/cm² |
| | | Seat | |
| | Air | Seat | 6 kgf/cm² |

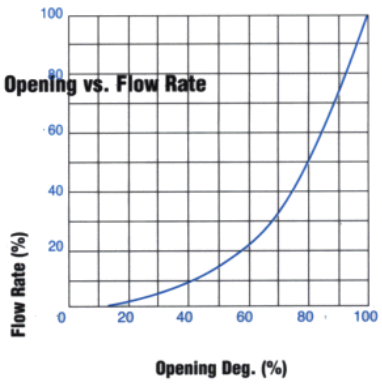


| Size | Inch | ½ | ¾ | 1 | 1¼ | 1½ | 2 | 2½ | 3 | 4 | | | | | |
|---|---|---|---|---|---|---|---|---|---|---|---|---|---|---|---|
| | mm | 15 | 20 | 25 | 32 | 40 | 50 | 65 | 80 | 100 | 125 | 150 | 200 | 250 | 300 |
| Bore Size | | 15 | 20 | 25 | 32 | 40 | 50 | 65 | 80 | 100 | 125 | 150 | 200 | 250 | 300 |
| L (mm) | | 108 | 117 | 127 | 140 | 165 | 178 | 190 | 200 | 225 | 250 | 300 | 450 | 527 | 610 |
| H (mm) | | 82 | 85 | 94 | 100 | 115 | 120 | 153 | 157 | 181 | 211 | 290 | 340 | - | - |
| D (mm) | | 130 | 130 | 160 | 160 | 230 | 230 | 400 | 400 | 460 | 460 | 1000 | 1500 | - | - |
| Weight (kg) | | | | 4.8 | | 6.0 | 8.3 | 13 | 15 | 23 | 47 | 48 | 108 | 208 | |

# CAST STEEL BALL VALVES

## ANSI 150, 300

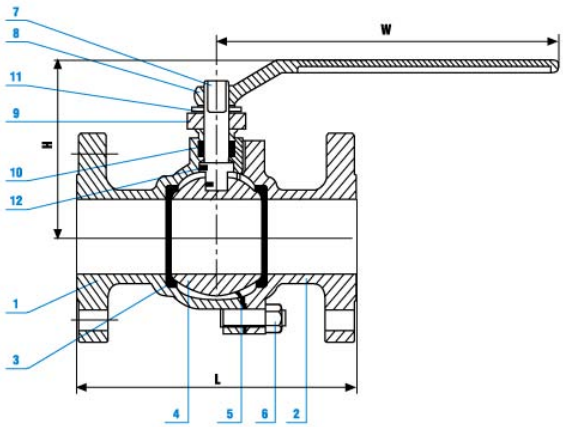


| No. | Parts | Materials |
|---|---|---|
| 1. | Body | WCB |
| 2. | Body Cap | WCB |
| 3. | Seat | Teflon |
| 4. | Ball | SUS 304 |
| 5. | Joint Gasket | Teflon |
| 6. | Gland Bolt | SS41 |
| 7. | Stem | SUS 304 |
| 8. | Handle | Cast Iron |
| 9. | Gland Flanged | Cast Iron |
| 10. | Gland Packing | Teflon |
| 11. | Travel Stopper | SS41 |
| 12. | Gasket | Teflon |

Specification :

- Wall thickness : ANSI B16.34
- F-F dimensions : ANSI B16.10
- End Flanges : ANSI 16.50
- Temperature Range : -60 to 450ºF

| Type | Size | Inch | ½ | ¾ | 1 | 1¼ | 1½ | 2 | 2½ | 3 | 4 | 5 | 6 | 8 | 10 | 12 |
|---|---|---|---|---|---|---|---|---|---|---|---|---|---|---|---|---|
| | | mm | 15 | 20 | 25 | 32 | 40 | 50 | 65 | 80 | 100 | 125 | 150 | 200 | 250 | 300 |
| ANSI 150 | L (mm) | | 108 | 117 | 127 | 140 | 165 | 178 | 190 | 200 | 225 | 250 | 300 | 450 | 527 | 610 |
| | H (mm) | | 86 | 90 | 98 | 100 | 127 | 140 | 165 | 178 | 229 | 261 | 311 | 349 | - | - |
| | W (mm) | | 140 | 140 | 149 | 160 | 200 | 254 | 305 | 356 | 508 | 560 | 813 | 1016 | - | - |
| | Weight (kg) | | 2.3 | 3.0 | 4.5 | | 7.0 | 9.5 | 15 | 19 | 33 | 47 | 93 | 160 | 208 | |
| ANSI 300 | L (mm) | | 140 | 152 | 165 | 180 | 191 | 216 | 241 | 283 | 305 | 350 | 403 | 504 | 527 | 610 |
| | H (mm) | | 84 | 90 | 98 | 91 | 127 | 140 | 165 | 178 | 229 | 251 | 311 | 349 | - | - |
| | W (mm) | | 140 | 140 | 149 | 160 | 200 | 254 | 305 | 356 | 508 | 560 | 813 | 1016 | - | - |
| | Weight (kg) | | 2.5 | 3.5 | 5.5 | | 10.5 | 14.5 | 23.5 | 30 | 55 | 70 | 118 | 200 | 308 | |