STEEL BUTTWELDING FITTINGS

Applicable Standards

ASME Standards

B16.9	Factory-Made Wrought Steel Buttwelding Fittings
B16.28	Wrought Steel Buttwelding Short Radius Elbows and Returns
B16.25	Buttwelding Ends
B36.10	Welded and Seamless Wrought Steel Pipe
B36.19	Stainless Steel Pipe

ASTM Standards

A234	Piping Fittings of Wrought Carbon Steel and Alloy Steel for Moderate and High Temperature Service
A403	Wrought Austenitic Stainless Steel Piping Fittings
A420	Piping Fittings of Wrought Carbon Steel and Alloy Steel for Low Temperature Service
A815	Wrought Ferritic, Ferritic/Austenitic, and Martensitic Stainless Steel Piping Fittings

MSS Standards

SP-43	Wrought Stainless Steel Butt-Welding Fittings
SP-75	High Test Wrought Butt-Welding Fittings
SP-79	Socket Welding Reducer Inserts
SP-87	Factory-Made Butt-Welding Fittings for Class I Nuclear Piping Applications

JIS Standards

B2220	Steel Welding Pipe Flanges
B2311	Steel Butt-Welding Pipe Fittings for Ordinary Use
B2312	Steel Butt-Welding Pipe Fittings
B2313	Steel Plate Butt-Welding Pipe Fittings
G3452	Carbon Steel Pipes for Ordinary Piping
G3454	Carbon Steel Pipes for Pressure Service
G3457	Arc Welded Carbon Steel Pipes

DIN Standards

2605-1	Steel Butt-Welding Pipe Fittings; Elbows and Bends with Reduced Pressure Factor
2609	Steel Butt-Welding Pipe Fittings; Technical Delivery Conditions
2615-1	Steel Butt-Welding Pipes Fittings; Tees with Reduced Pressure Factor
2615-2	Steel Butt-Welding Pipe Fittings; Tees for Use at Full Service Pressure
2616-1	Steel Butt-Welding Pipe Fittings; Eccentric Reducers with Reduced Pressure Factor
2616-2	Steel Butt-Welding Pipe Fittings; Reducers for Use at Full Service Pressure
2617	Steel Butt-Welding Pipe Fittings; Caps
1626	Welded Circular Unalloyed Steel Tubes Subject to Special Requirements; Technical Delivery Conditions
1629	Seamless Circular Unalloyed Steel Tubes Subject to Special Requirements; Technical Delivery Conditions
17175	Seamless Tubes of Heat-Resistant Steels; Technical Conditions of Delivery
50049	Materials Testing Certificates

EN (European) Standards

10204	Inspection Documents for Metallic Products
10253-1	Butt-Welding Pipe Fittings; Wrought Carbon Steel for General Use and Without Specific Inspection Requirements

NACE Standards

MR0175	Sulfide Stress Cracking Resistant Metallic Materials for Oilfield Equipment

Wall Thickness Schedules (ASME)

ASME B36.10, ASME B36.19

Nominal pipe Size (NPS)		Outside Diameter		Nominal Wall Thickness									
				Sch5s		Sch10s		Sch40s		Sch80s		Sch5	
A	B	MM	IN	MM	IN	MM	IN	MM	IN	MM	IN	MM	IN
8	1/4	13.7	0.540	-	-	1.65	0.065	2.24	0.088	3.02	0.119	-	-
10	3/8	17.1	0.675	-	-	1.65	0.065	2.31	0.091	3.20	0.126	-	-
15	1/2	21.3	0.840	1.65	0.065	2.11	0.083	2.77	0.109	3.73	0.147	1.65	0.065
20	3/4	26.7	1.05	1.65	0.065	2.11	0.083	2.87	0.113	3.91	0.154	1.65	0.065
25	1	33.4	1.32	1.65	0.065	2.77	0.109	3.38	0.133	4.55	0.179	1.65	0.065
32	1¼	42.2	1.66	1.65	0.065	2.77	0.109	3.56	0.140	4.85	0.191	1.65	0.065
40	1½	48.3	1.9	1.65	0.065	2.77	0.109	3.68	0.145	5.08	0.200	1.65	0.065
50	2	60.3	2.38	1.65	0.065	2.77	0.109	3.91	0.154	5.54	0.218	1.65	0.065
65	2½	73.0	2.88	2.11	0.083	3.05	0.120	5.16	0.203	7.01	0.276	2.11	0.083
80	3	88.9	3.5	2.11	0.083	3.05	0.120	5.49	0.216	7.62	0.300	2.11	0.083
90	3½	101.6	4	2.11	0.083	3.05	0.120	5.74	0.226	8.08	0.318	2.11	0.083
100	4	114.3	4.5	2.11	0.083	3.05	0.120	6.02	0.237	8.56	0.337	2.11	0.083
125	5	141.3	5.56	2.77	0.109	3.40	0.134	6.55	0.258	9.53	0.375	2.77	0.109
150	6	168.3	6.62	2.77	0.109	3.40	0.134	7.11	0.280	10.97	0.432	2.77	0.109
200	8	219.1	8.62	2.77	0.109	3.76	0.148	8.18	0.322	12.70	0.500	2.77	0.109
250	10	273.0	10.75	3.40	0.134	4.19	0.165	9.27	0.365	12.70	0.500	3.40	0.134
300	12	323.8	12.75	3.96	0.156	4.57	0.180	9.53	0.375	12.70	0.500	3.96	0.156
350	14	355.6	14	3.96	0.156	4.78	0.188	9.53	0.375	12.70	0.500	3.96	0.156
400	16	406.4	16	4.19	0.165	4.78	0.188	9.53	0.375	12.70	0.500	4.19	0.165
450	18	457	18	4.19	0.165	4.78	0.188	9.53	0.375	12.70	0.500	4.19	0.165
500	20	508	20	4.78	0.188	5.54	0.218	9.53	0.375	12.70	0.500	4.78	0.188
550	22	559	22	4.78	0.188	5.54	0.218	9.53	0.375	12.70	0.500	4.78	0.188
600	24	610	24	5.54	0.218	6.35	0.250	9.53	0.375	12.70	0.500	5.54	0.218
650	26	660	26	-	-	-	-	-	-	-	-	-	-
700	28	711	28	-	-	-	-	-	-	-	-	-	-
750	30	762	30	6.35	0.250	7.92	0.312	9.53	0.375	12.70	0.500	6.35	0.250
800	32	813	32	-	-	-	-	-	-	-	-	-	-
850	34	864	34	-	-	-	-	-	-	-	-	-	-
900	36	914	36	-	-	-	-	-	-	-	-	-	-
950	38	965	38	-	-	-	-	-	-	-	-	-	-
1000	40	1016	40	-	-	-	-	-	-	-	-	-	-
1050	42	1067	42	-	-	-	-	-	-	-	-	-	-
1100	44	1118	44	-	-	-	-	-	-	-	-	-	-
1150	46	1168	46	-	-	-	-	-	-	-	-	-	-
1200	48	1219	48	-	-	-	-	-	-	-	-	-	-

Nominal pipe Size (NPS)		Outside Diameter		Nominal Wall Thickness									
				Sch10		Sch20		Sch30		STD		Sch40	
A	B	MM	IN	MM	IN	MM	IN	MM	IN	MM	IN	MM	IN
8	1/4	13.7	0.540	1.65	0.065	-	-	1.85	0.073	2.24	0.088	2.24	0.088
10	3/8	17.1	0.675	1.65	0.065	-	-	1.85	0.073	2.31	0.091	2.31	0.091
15	1/2	21.3	0.840	2.11	0.083	-	-	2.41	0.095	2.77	0.109	2.77	0.109
20	3/4	26.7	1.05	2.11	0.083	-	-	2.41	0.095	2.87	0.113	2.87	0.113
25	1	33.4	1.32	2.77	0.109	-	-	2.90	0.114	3.38	0.133	3.38	0.133
32	1¼	42.2	1.66	2.77	0.109	-	-	2.97	0.117	3.56	0.140	3.56	0.140
40	1½	48.3	1.9	2.77	0.109	-	-	3.18	0.125	3.68	0.145	3.68	0.145
50	2	60.3	2.38	2.77	0.109	-	-	3.18	0.125	3.91	0.154	3.91	0.154
65	2?	73.0	2.88	3.05	0.120	-	-	4.78	0.188	5.16	0.203	5.16	0.203
80	3	88.9	3.5	3.05	0.120	-	-	4.78	0.188	5.49	0.216	5.49	0.216
90	3½	101.6	4	3.05	0.120	-	-	4.78	0.188	5.74	0.226	5.74	0.226
100	4	114.3	4.5	3.05	0.120	-	-	4.78	0.188	6.02	0.237	6.02	0.237
125	5	141.3	5.56	3.40	0.134	-	-	-	-	6.55	0.258	6.55	0.258
150	6	168.3	6.62	3.40	0.134	-	-	-	-	7.11	0.280	7.11	0.280
200	8	219.1	8.62	3.76	0.148	6.35	0.250	7.04	0.277	8.18	0.322	8.18	0.322
250	10	273.0	10.75	4.19	0.165	6.35	0.250	7.80	0.307	9.27	0.365	9.27	0.365
300	12	323.8	12.75	4.57	0.180	6.35	0.250	8.38	0.330	9.53	0.375	10.31	0.406
350	14	355.6	14	6.35	0.250	7.92	0.312	9.53	0.375	9.53	0.375	11.13	0.438
400	16	406.4	16	6.35	0.250	7.92	0.312	9.53	0.375	9.53	0.375	12.70	0.500
450	18	457	18	6.35	0.250	7.92	0.312	11.13	0.438	9.53	0.375	14.27	0.562
500	20	508	20	6.35	0.250	9.53	0.375	12.70	0.500	9.53	0.375	15.09	0.594
550	22	559	22	6.35	0.250	9.53	0.375	12.70	0.500	9.53	0.375	-	-
600	24	610	24	6.35	0.250	9.53	0.375	14.27	0.562	9.53	0.375	17.48	0.688
650	26	660	26	7.92	0.312	12.70	0.500	-	-	9.53	0.375	-	-
700	28	711	28	7.92	0.312	12.70	0.500	15.88	0.625	9.53	0.375	-	-
750	30	762	30	7.92	0.312	12.70	0.500	15.88	0.625	9.53	0.375	-	-
800	32	813	32	7.92	0.312	12.70	0.500	15.88	0.625	9.53	0.375	17.48	0.688
850	34	864	34	7.92	0.312	12.70	0.500	15.88	0.625	9.53	0.375	17.48	0.688
900	36	914	36	7.92	0.312	12.70	0.500	15.88	0.625	9.53	0.375	19.05	0.750
950	38	965	38	-	-	-	-	-	-	9.53	0.375	-	-
1000	40	1016	40	-	-	-	-	-	-	9.53	0.375	-	-
1050	42	1067	42	-	-	-	-	-	-	9.53	0.375	-	-
1100	44	1118	44	-	-	-	-	-	-	9.53	0.375	-	-
1150	46	1168	46	-	-	-	-	-	-	9.53	0.375	-	-
1200	48	1219	48	-	-	-	-	-	-	9.53	0.375	-	-

Wall Thickness Schedules (ASME)

ASME B36.10 ASME B36.19

Nominal pipe Size (NPS)		Outside Diameter		Nominal Wall Thickness							
				Sch60		XS		Sch80		Sch100	
A	B	MM	IN	MM	IN	MM	IN	MM	IN	MM	IN
8	1/4	13.7	0.540	-	-	3.02	0.119	3.02	0.119	-	-
10	3/8	17.1	0.675	-	-	3.20	0.126	3.20	0.126	-	-
15	1/2	21.3	0.840	-	-	3.73	0.147	3.73	0.147	-	-
20	3/4	26.7	1.05	-	-	3.91	0.154	3.91	0.154	-	-
25	1	33.4	1.32	-	-	4.55	0.179	4.55	0.179	-	-
32	1¼	42.2	1.66	-	-	4.85	0.191	4.85	0.191	-	-
40	1½	48.3	1.9	-	-	5.08	0.200	5.08	0.200	-	-
50	2	60.3	2.38	-	-	5.54	0.218	5.54	0.218	-	-
65	2½	73.0	2.88	-	-	7.01	0.276	7.01	0.276	-	-
80	3	88.9	3.5	-	-	7.62	0.300	7.62	0.300	-	-
90	3?	101.6	4	-	-	8.08	0.318	8.08	0.318	-	-
100	4	114.3	4.5	-	-	8.56	0.337	8.56	0.337	-	-
125	5	141.3	5.56	-	-	9.53	0.375	9.53	0.375	-	-
150	6	168.3	6.62	-	-	10.97	0.432	10.97	0.432	-	-
200	8	219.1	8.62	10.31	0.406	12.70	0.500	12.70	0.500	15.09	0.594
250	10	273.0	10.75	12.70	0.500	12.70	0.500	15.09	0.594	18.26	0.719
300	12	323.8	12.75	14.27	0.562	12.70	0.500	17.48	0.688	21.44	0.844
350	14	355.6	14	15.09	0.594	12.70	0.500	19.05	0.750	23.83	0.938
400	16	406.4	16	16.66	0.656	12.70	0.500	21.44	0.844	26.19	1.031
450	18	457	18	19.05	0.750	12.70	0.500	23.83	0.938	29.36	1.156
500	20	508	20	20.62	0.812	12.70	0.500	26.19	1.031	32.54	1.281
550	22	559	22	22.23	0.875	12.70	0.500	28.58	1.125	34.93	1.375
600	24	610	24	24.61	0.969	12.70	0.500	30.96	1.219	38.89	1.531
650	26	660	26	-	-	12.70	0.500	-	-	-	-
700	28	711	28	-	-	12.70	0.500	-	-	-	-
750	30	762	30	-	-	12.70	0.500	-	-	-	-
800	32	813	32	-	-	12.70	0.500	-	-	-	-
850	34	864	34	-	-	12.70	0.500	-	-	-	-
900	36	914	36	-	-	12.70	0.500	-	-	-	-
950	38	965	38	-	-	12.70	0.500	-	-	-	-
1000	40	1016	40	-	-	12.70	0.500	-	-	-	-
1050	42	1067	42	-	-	12.70	0.500	-	-	-	-
1100	44	1118	44	-	-	12.70	0.500	-	-	-	-
1150	46	1168	46	-	-	12.70	0.500	-	-	-	-
1200	48	1219	48	-	-	12.70	0.500	-	-	-	-

Nominal pipe Size (NPS)		Outside Diameter		Nominal Wall Thickness							
				Sch120		Sch140		Sch160		XXS	
A	B	MM	IN	MM	IN	MM	IN	MM	IN	MM	IN
8	1/4	13.7	0.540	-	-	-	-	-	-	-	-
10	3/8	17.1	0.675	-	-	-	-	-	-	-	-
15	1/2	21.3	0.840	-	-	-	-	4.78	0.188	7.47	0.294
20	3/4	26.7	1.05	-	-	-	-	5.56	0.219	7.82	0.308
25	1	33.4	1.32	-	-	-	-	6.35	0.250	9.09	0.358
32	1¼	42.2	1.66	-	-	-	-	6.35	0.250	9.70	0.382
40	1½	48.3	1.9	-	-	-	-	7.14	0.281	10.15	0.400
50	2	60.3	2.38	-	-	-	-	8.74	0.344	11.07	0.436
65	2½	73.0	2.88	-	-	-	-	9.53	0.375	14.02	0.552
80	3	88.9	3.5	-	-	-	-	11.13	0.438	15.24	0.600
90	3½	101.6	4	-	-	-	-	-	-	-	-
100	4	114.3	4.5	11.13	0.438	-	-	13.49	0.531	17.12	0.674
125	5	141.3	5.56	12.70	0.500	-	-	15.88	0.625	19.05	0.750
150	6	168.3	6.62	14.27	0.562	-	-	18.26	0.719	21.95	0.864
200	8	219.1	8.62	18.26	0.719	20.62	0.812	23.01	0.906	22.23	0.875
250	10	273.0	10.75	21.44	0.844	25.40	1.000	28.58	1.125	25.40	1.000
300	12	323.8	12.75	25.40	1.000	28.58	1.125	33.32	1.312	25.40	1.000
350	14	355.6	14	27.79	1.094	31.75	1.250	35.71	1.406	-	-
400	16	406.4	16	30.96	1.219	36.53	1.438	40.49	1.594	-	-
450	18	457	18	34.93	1.375	39.67	1.562	45.24	1.781	-	-
500	20	508	20	38.10	1.500	44.45	1.750	50.01	1.969	-	-
550	22	559	22	41.28	1.625	47.63	1.875	53.98	2.125	-	-
600	24	610	24	46.02	1.812	52.37	2.062	59.54	2.344	-	-
650	26	660	26	-	-	-	-	-	-	-	-
700	28	711	28	-	-	-	-	-	-	-	-
750	30	762	30	-	-	-	-	-	-	-	-
800	32	813	32	-	-	-	-	-	-	-	-
850	34	864	34	-	-	-	-	-	-	-	-
900	36	914	36	-	-	-	-	-	-	-	-
950	38	965	38	-	-	-	-	-	-	-	-
1000	40	1016	40	-	-	-	-	-	-	-	-
1050	42	1067	42	-	-	-	-	-	-	-	-
1100	44	1118	44	-	-	-	-	-	-	-	-
1150	46	1168	46	-	-	-	-	-	-	-	-
1200	48	1219	48	-	-	-	-	-	-	-	-

Wall Thickness Schedules(JIS and DIN)

JIS G3452 JIS G3454 JIS G3457

Nominal Pipe Size(NPS)		Outside Diameter	SGP		LG		STD		XS	
A	B	JIS	W.T	I.D	W.T	I.D	W.T	I.D	W.T	I.D
15	1/2	21.7	2.8	16.1	-	-	-	-	-	-
20	3/4	27.2	2.8	21.6	-	-	-	-	-	-
25	1	34	3.2	27.6	-	-	-	-	-	-
32	1¼	42.7	3.5	35.7	-	-	-	-	-	-
40	1½	48.6	3.5	41.6	-	-	-	-	-	-
50	2	60.5	3.8	52.9	-	-	-	-	-	-
65	2½	76.3	4.2	67.9	-	-	-	-	-	-
80	3	89.1	4.2	80.7	-	-	-	-	-	-
90	3½	101.6	4.2	93.2	-	-	-	-	-	-
100	4	114.3	4.5	105.3	-	-	-	-	-	-
125	5	139.8	4.5	130.8	-	-	-	-	-	-
150	6	165.2	5	155.2	5	155.2	-	-	-	-
200	8	216.3	5.8	204.7	5.8	204.7	-	-	-	-
250	10	267.4	6.6	254.2	6.6	254.2	-	-	-	-
300	12	318.5	6.9	304.7	6.9	304.7	-	-	-	-
350	14	355.6	7.9	339.8	7.9	339.8	9.5	336.6	12.7	330.2
400	16	406.4	7.9	390.6	7.9	390.6	9.5	387.4	12.7	381
450	18	457.2	7.9	441.4	7.9	441.4	9.5	438.2	12.7	431.8
500	20	508	7.9	492.2	7.9	492.2	9.5	489	12.7	482.6
550	22	558.8	-	-	7.9	543	9.5	539.8	12.7	533.4
600	24	609.6	-	-	7.9	593.8	9.5	590.6	12.7	584.2
650	26	660.4	-	-	7.9	644.6	9.5	641.4	12.7	635
700	28	711.2	-	-	7.9	695.4	9.5	692.2	12.7	685.8
750	30	762	-	-	7.9	746.2	9.5	743	12.7	736.6
800	32	812.8	-	-	7.9	797	9.5	793.8	12.7	787.4
850	34	863.6	-	-	7.9	847.8	9.5	844.6	12.7	838.2
900	36	914.4	-	-	7.9	898.6	9.5	895.4	12.7	889
950	38	965.2	-	-	7.9	949.4	9.5	946.2	12.7	939.8
1000	40	1016	-	-	7.9	1000.2	9.5	997	12.7	990.6
1050	42	1068.8	-	-	-	-	9.5	1047.8	12.7	1041.4
1100	44	1117.6	-	-	-	-	9.5	1098.6	12.7	1092.2
1150	46	1168.4	-	-	-	-	9.5	1149.4	12.7	1143
1200	48	1219.2	-	-	-	-	9.5	1200.2	12.7	1193.8

DIN 2448 DIN 2458

Nominal Pipe Size (NPS)		Outside Diameter	Wall Thickness, s, For Series				
A	B		1	2	3	4	5
½	15	21.3	1.6	-	2.0	3.2	4.0
¾	20	26.9	1.6	-	2.3	3.2	4.0
1	25	33.7	2.0	-	2.6	3.2	4.0
1¼	32	42.4	2.0	-	2.6	3.6	4.0
1½	40	48.3	2.0	-	2.6	4.0	5.0
2	50	60.3	2.0	-	2.9	4.5	5.6
2½	65	76.1	2.3	-	2.9	5.0	7.1
3	80	88.9	2.3	-	3.2	5.6	8.0
4	100	114.3	2.6	-	3.6	6.3	8.8
5	125	139.7	2.6	-	4.0	6.3	10.0
6	150	168.3	2.6	4.0	4.5	7.1	11.0
8	200	219.1	2.9	4.5	6.3	8.0	12.5
10	250	273	2.9	5.0	6.3	8.8	-
12	300	323.9	2.9	5.6	7.1	10.0	-
14	350	355.6	3.2	5.6	8.0	11.0	-
16	400	406.4	3.2	6.3	8.8	12.5	-
18	450	457	4.0	6.3	10.0	-	-
20	500	508	4.0	6.3	11.0	-	-
24	600	610	5.0	6.3	12.5	-	-
28	700	711	5.0	7.1	12.5	-	-
32	800	813	5.6	8.0	12.5	-	-
36	900	914	6.3	10.0	12.5	-	-
40	1000	1016	6.3	10.0	12.5	-	-
48	1200	1220	6.3	12.5	-	-	-

Wrought Steel Buttwelding Fittings (ASME)
Long and Short Radius Elbows

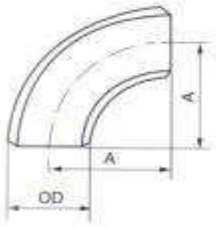

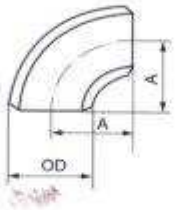

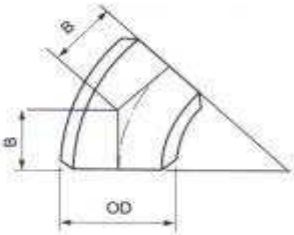

ASME B16.9, B16.28

*Zibo Wel-fit Standards

Nominal Pipe Size (NPS)	Outside Diameter at Bevel OD		Center-to-End							
			90 Elbows A				45 Elbows B			
			Long Radius		Short Radius		Long Radius		Short Radius*	
	IN	MM	IN	MM	IN	MM	IN	MM	IN	MM
1/2	0.84	21.3	1.5	38	-	-	0.62	16	-	-
3/4	1.05	26.7	1.12	29	-	-	0.44	11	-	-
1	1.32	33.4	1.5	38	1	25	0.88	22	0.41	10
1¼	1.66	42.2	1.88	48	1.25	32	1	25	0.52	13
1½	1.9	48.3	2.25	57	1.5	38	1.12	29	0.62	16
2	2.38	60.3	3	76	2	51	1.38	35	0.83	21
2½	2.88	73.0	3.75	95	2.5	64	1.75	44	1.04	26
3	3.5	88.9	4.5	114	3	76	2	51	1.24	32
3½	4	101.6	5.25	133	3.5	89	2.25	57	1.45	37
4	4.5	114.3	6	152	4	102	2.5	64	1.66	42
5	5.56	141.3	7.5	190	5	127	3.12	79	2.07	53
6	6.62	168.3	9	229	6	152	3.75	95	2.50	63
8	8.62	219.1	12	305	8	203	5	127	3.31	84
10	10.75	273.0	15	381	10	254	6.25	159	4.14	105
12	12.75	323.8	18	457	12	305	7.5	190	4.97	126
14	14	355.6	21	533	14	356	8.75	222	5.80	147
16	16	406.4	24	610	16	406	10	254	6.63	168
18	18	457	27	686	18	457	11.25	286	7.46	189
20	20	508	30	762	20	508	12.5	318	8.28	210
22	22	559	33	838	22	559	13.5	343	9.11	232
24	24	610	36	914	24	610	15	381	9.94	253
26	26	660	39	991	26	660	16	405	10.77	274
28	28	711	42	1067	28	711	17.25	438	11.60	295
30	30	762	45	1143	30	762	18.5	470	12.43	316
32	32	813	48	1219	32	813	19.75	502	14.89	378
34	34	864	51	1295	34	864	21	533	14.08	358
36	36	914	54	1372	36	914	22.25	565	14.91	379
38	38	965	57	1448	38	965	23.62	600	15.74	400
40	40	1016	60	1524	40	1016	24.88	632	16.57	421
42	42	1067	63	1600	42	1067	26	660	17.40	442
44	44	1118	66	1676	44	1118	27.38	695	18.23	463
46	46	1168	69	1753	46	1168	28.62	727	19.05	484
48	48	1219	72	1829	48	1219	29.88	759	19.88	505

Wrought Steel Buttwelding Fittings (ASME)
Long and Short Radius Returns

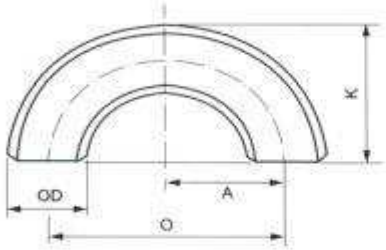

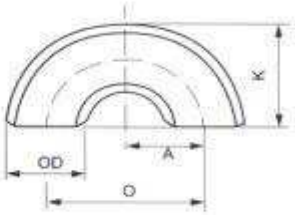

ASME B16.9, B16.28

Nominal Pipe Size (NPS)	Outside Diameter at Bevel OD		Center-to-End 180 Returns O				End-to-End 180 Returns K			
			Long Radius		Short Radius		Long Radius		Short Radius	
	IN	MM	IN	MM	IN	MM	IN	MM	IN	MM
1/2	0.84	21.3	3	76	-	-	1.88	48	-	-
3/4	1.05	26.7	2.25	57	-	-	1.69	43	-	-
1	1.32	33.4	3	76	2	51	2.19	56	1.62	41
1¼	1.66	42.2	3.75	95	2.5	64	2.75	70	2.06	52
1½	1.9	48.3	4.5	114	3	76	3.25	83	2.44	62
2	2.38	60.3	6	152	4	102	4.19	106	3.19	81
2½	2.88	73.0	7.5	190	5	127	5.19	132	3.94	100
3	3.5	88.9	9	229	6	152	6.25	159	4.75	121
3½	4	101.6	10.5	267	7	178	7.25	184	5.5	140
4	4.5	114.3	12	305	8	203	8.25	210	6.25	159
5	5.56	141.3	15	381	10	254	10.31	262	7.75	197
6	6.62	168.3	18	457	12	305	12.31	313	9.31	237
8	8.62	219.1	24	610	16	406	16.31	414	12.31	313
10	10.75	273.0	30	762	20	508	20.38	518	15.38	391
12	12.75	323.8	36	914	24	610	24.38	619	18.38	467
14	14	355.6	42	1067	28	711	28	711	21	533
16	16	406.4	48	1219	32	813	32	813	24	610
18	18	457	54	1372	36	914	36	914	27	686
20	20	508	60	1524	40	1016	40	1016	30	762
22	22	559	66	1676	44	1118	44	1118	33	838
24	24	610	72	1829	48	1219	48	1219	36	914

Wrought Steel Buttwelding Fittings (ASME)
Straight Tees and Caps

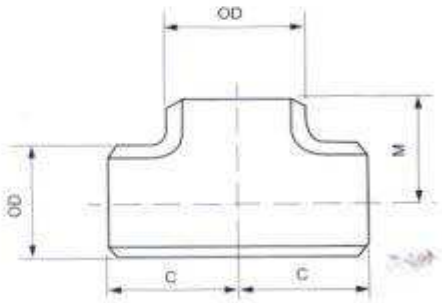

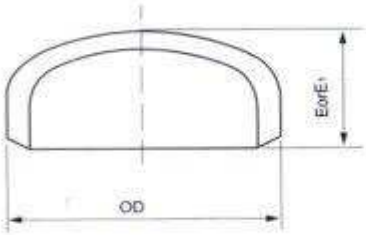

ASME B16.9,

Nominal Pipe Size (NPS)	Outside Diameter at Bevel OD		Center-to-End				End-to-End					
			Straight Tees				Caps					
							Length (2)		Limiting Wall Thickness for Length "E"		Length (3)	
			C		M(1)		E				E1	
	IN	MM	IN	MM	IN	MM	IN	MM	IN	MM	IN	MM
1/2	0.84	21.3	1	25	1	25	1	25	0.18	4.57	1	25
3/4	1.05	26.7	1.12	29	1.12	29	1	25	0.15	3.81	1	25
1	1.32	33.4	1.5	38	1.5	38	1.5	38	0.18	4.57	1.5	38
1 1/4	1.66	42.2	1.88	48	1.88	48	1.5	38	0.19	4.83	1.5	38
1 1/2	1.9	48.3	2.25	57	2.25	57	1.5	38	0.2	5.08	1.5	38
2	2.38	60.3	2.5	64	2.5	64	1.5	38	0.22	5.59	1.75	44
2 1/2	2.88	73	3	76	3	76	1.5	38	0.28	7.11	2	51
3	3.5	88.9	3.38	86	3.38	86	2	51	0.3	7.62	2.5	64
3 1/2	4	101.6	3.75	95	3.75	95	2.5	64	0.32	8.13	3	76
4	4.5	114.3	4.12	105	4.12	105	2.5	64	0.34	8.64	3	76
5	5.56	141.3	4.88	124	4.88	124	3	76	0.38	9.65	3.5	89
6	6.62	168.3	5.62	143	5.62	143	3.5	89	0.43	10.92	4	102
8	8.62	219.1	7	178	7	178	4	102	0.5	12.7	5	127
10	10.75	273	8.5	216	8.5	216	5	127	0.5	12.7	6	152
12	12.75	323.8	10	254	10	254	6	152	0.5	12.7	7	178
14	14	355.6	11	279	11	279	6.5	165	0.5	12.7	7.5	191
16	16	406.4	12	305	12	305	7	178	0.5	12.7	8	203
18	18	457.2	13.5	343	13.5	343	8	203	0.5	12.7	9	229
20	20	508	15	381	15	381	9	229	0.5	12.7	10	254
22	22	558.8	16.5	419	16.5	419	10	254	0.5	12.7	10	254
24	24	609.6	17	432	17	432	10.5	267	0.5	12.7	12	305
26	26	660.4	19.5	495	19.5	495	10.5	267	-	-	-	-
28	28	711.2	20.2	521	20.2	521	10.5	267	-	-	-	-
30	30	762	22	559	22	559	10.5	267	-	-	-	-
32	32	812.8	23.5	597	23.5	597	10.5	267	-	-	-	-
34	34	863.6	25	635	25	635	10.5	267	-	-	-	-
36	36	914.4	26.5	673	26.5	673	10.5	267	-	-	-	-
38	38	965.2	28	711	28	711	12	305	-	-	-	-
40	40	1016	29.5	749	29.5	749	12	305	-	-	-	-
42	42	1066.8	30	762	28	711	12	305	-	-	-	-
44	44	1117.6	32	813	30	762	13.5	343	-	-	-	-
46	46	1168.4	33.5	851	31.5	800	13.5	343	-	-	-	-
48	48	1219.2	35	889	33	838	13.5	343	-	-	-	-

NOTES:

(1) Outlet dimension M for NPS 26 and larger is recommended but not required.

(2) Length E applies for thickness not exceeding that given in column "Limiting Wall Thickness for Length E

(3) Length E1 applies for thickness greater than that given in column "Limiting WallThickness for Length E" for NPS 24 and smaller.

Wrought Steel Buttwelding Fittings (ASME)

Lap Joint Stub Ends

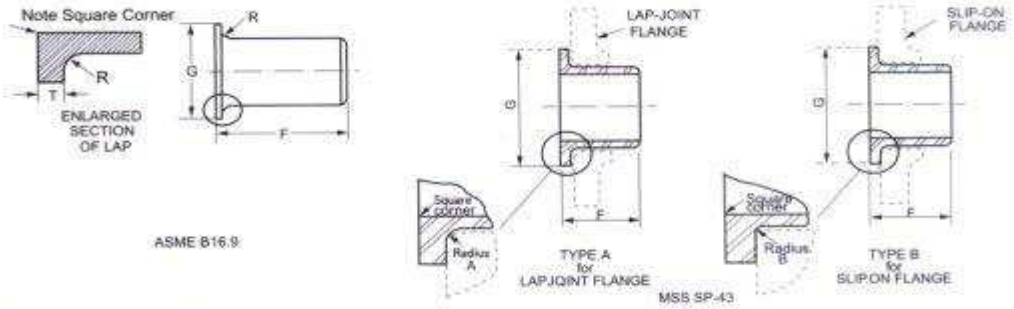

ASME B16.9 MSS SP-43

Nominal Pipe Size (NPS)	Outside Diameter at Bevel OD		Outside Diameter of Barrel				Diameter of Lap G (Nominal & Max)	
			Max		Min			
	IN	MM	IN	MM	IN	MM	IN	MM
1/2	0.84	21.3	0.896	22.8	0.809	20.5	1.38	35
3/4	1.05	26.7	1.106	28.1	1.019	25.9	1.69	43
1	1.32	33.4	1.376	35	1.284	32.6	2	51
1¼	1.66	42.2	1.716	43.6	1.629	41.4	2.5	64
1½	1.9	48.3	1.965	49.9	1.869	47.5	2.88	73
2	2.38	60.3	2.456	62.4	2.344	59.5	3.62	92
2½	2.88	73.0	2.966	75.3	2.844	72.2	4.12	106
3	3.5	88.9	3.596	91.3	3.469	88.1	5	127
3½	4	101.6	4.096	104	3.969	100.8	5.5	140
4	4.5	114.3	4.593	116.7	4.469	113.5	6.19	157
5	5.56	141.3	5.683	144.3	5.532	140.5	7.31	185
6	6.62	168.3	6.743	171.3	6.594	167.5	8.5	218
8	8.62	219.1	8.743	222.1	8.594	218.3	10.62	270
10	10.75	273.0	10.913	277.2	10.719	272.3	12.75	324
12	12.75	323.8	12.913	328	12.719	323.1	15	381
14	14	355.6	14.17	359.9	13.969	354.8	16.25	413
16	16	406.4	16.18	411	15.969	405.6	18.5	470
18	18	457	18.19	462	17.969	456	21	533
20	20	508	20.24	514	19.969	507	23	584
22	22	559	22.24	565	21.969	558	25.25	641
24	24	610	24.24	616	23.969	609	27.25	692

Nominal Pipe Size (NPS)	Length F				Radius R			
	ASME Long		ASME Short & MSS		MSS Type A & ASME (Nominal & Max)		MSS Type B (Max)	
	IN	MM	IN	MM	IN	MM	IN	MM
1/2	3	76	2	51	0.12	3	0.03	0.8
3/4	3	76	2	51	0.12	3	0.03	0.8
1	4	102	2	51	0.12	3	0.03	0.8
1¼	4	102	2	51	0.19	5	0.03	0.8
1½	4	102	2	51	0.25	6	0.03	0.8
2	6	152	2.5	64	0.31	8	0.03	0.8
2½	6	152	2.5	64	0.31	8	0.03	0.8
3	6	152	2.5	64	0.38	10	0.03	0.8
3½	6	152	3	76	0.38	10	0.03	0.8
4	6	152	3	76	0.44	11	0.03	0.8
5	8	203	3	76	0.44	11	0.06	1.5
6	8	203	3.5	89	0.5	13	0.06	1.5
8	8	203	4	102	0.5	13	0.06	1.5
10	10	254	5	127	0.5	13	0.06	1.5
12	10	254	6	152	0.5	13	0.06	1.5
14	12	305	6	152	0.5	13	0.06	1.5
16	12	305	6	152	0.5	13	0.06	1.5
18	12	305	6	152	0.5	13	0.06	1.5
20	12	305	6	152	0.5	13	0.06	1.5
22	12	305	6	152	0.5	13	0.06	1.5
24	12	305	6	152	0.5	13	0.06	1.5

Wrought Steel Buttwelding Fittings (ASME)
Reducing Tees and Concentric & Eccentric Reducers

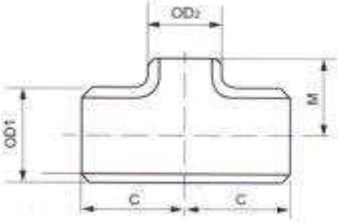

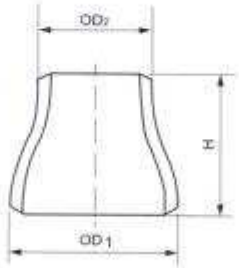

ASME B16.9

*Zibo Wei-fit Standards

Nominal Pipe Size (NPS)	Outside Diameter at Bevel				Center-to-End				End-to-End	
	OD1		OD2		C		M		H	
	IN	MM	IN	MM	IN	MM	IN	MM	IN	MM
3/4 × 1/2	1.05	26.7	0.84	21.3	1.12	29	1.12	29	1.5	38
1 × 3/4	1.32	33.4	1.05	26.7	1.5	38	1.5	38	2	51
1 × 1/2	1.32	33.4	0.84	21.3	1.5	38	1.5	38	2	51
1 1/4 × 1	1.66	42.2	1.32	33.4	1.88	48	1.88	48	2	51
1 1/4 × 3/4	1.66	42.2	1.05	26.7	1.88	48	1.88	48	2	51
1 1/4 × 1/2	1.66	42.2	0.84	21.3	1.88	48	1.88	48	2	51
1 1/2 × 1 1/4	1.9	48.3	1.66	42.2	2.25	57	2.25	57	2.5	64
1 1/2 × 1	1.9	48.3	1.32	33.4	2.25	57	2.25	57	2.5	64
1 1/2 × 3/4	1.9	48.3	1.05	26.7	2.25	57	2.25	57	2.5	64
1 1/2 × 1/2	1.9	48.3	0.84	21.3	2.25	57	2.25	57	2.5	64
2 × 1 1/2	2.38	60.3	1.9	48.3	2.5	64	2.38	60	3	76
2 × 1 1/4	2.38	60.3	1.66	42.2	2.5	64	2.25	57	3	76
2 × 1	2.38	60.3	1.32	33.4	2.5	64	2	51	3	76
2 × 3/4	2.38	60.3	1.05	26.7	2.5	64	1.75	44	3	76
2 × 1/2	2.38	60.3	0.84	21.3	2.5	64	*	*	3	76
2 1/2 × 2	2.88	73	2.38	60.3	3	76	2.75	70	3.5	89
2 1/2 × 1 1/2	2.88	73	1.9	48.3	3	76	2.62	67	3.5	89
2 1/2 × 1 1/4	2.88	73	1.66	42.2	3	76	2.5	64	3.5	89
2 1/2 × 1	2.88	73	1.32	33.4	3	76	2.25	57	3.5	89
2 1/2 × 3/4	2.88	73	1.05	26.7	3	76	*	*	3.5	89
2 1/2 × 1/2	2.88	73	0.84	21.3	3	76	*	*	3.5	89
3 × 2 1/2	3.5	88.9	2.88	73	3.38	86	3.25	83	3.5	89
3 × 2	3.5	88.9	2.38	60.3	3.38	86	3	76	3.5	89
3 × 1 1/2	3.5	88.9	1.9	48.3	3.38	86	2.88	73	3.5	89
3 × 1 1/4	3.5	88.9	1.66	42.2	3.38	86	2.75	70	3.5	89
3 × 1	3.5	88.9	1.32	33.4	3.38	86	*	*	3.5	89
3 × 3/4	3.5	88.9	1.05	26.7	3.38	86	*	*	3.5	89
3 × 1/2	3.5	88.9	0.84	21.3	3.38	86	*	*	3.5	89
3 1/2 × 3	4	101.6	3.5	88.9	3.75	95	3.62	92	4	102
3 1/2 × 2 1/2	4	101.6	2.88	73	3.75	95	3.5	89	4	102
3 1/2 × 2	4	101.6	2.38	60.3	3.75	95	3.25	83	4	102
3 1/2 × 1 1/2	4	101.6	1.9	48.3	3.75	95	3.12	79	4	102
3 1/2 × 1 1/4	4	101.6	1.66	42.2	3.75	95	*	*	4	102
4 × 3 1/2	4.5	114.3	4	101.6	4.12	105	4	102	4	102
4 × 3	4.5	114.3	3.5	88.9	4.12	105	3.88	98	4	102
4 × 2 1/2	4.5	114.3	2.88	73	4.12	105	3.75	95	4	102
4 × 2	4.5	114.3	2.38	60.3	4.12	105	3.5	89	4	102
4 × 1 1/2	4.5	114.3	1.9	48.3	4.12	105	3.38	86	4	102
4 × 1 1/4	4.5	114.3	1.66	42.2	4.12	105	*	*	4	102
4 × 1	4.5	114.3	1.32	33.4	4.12	105	*	*	4	102

Wrought Steel Buttwelding Fittings (ASME)
Reducing Tees and Concentric & Eccentric Reducers

ASME B16.9

*Zibo Wel-fit Standards

Nominal Pipe Size (NPS)	Outside Diameter at Bevel				Center-to-End				End-to-End	
	OD1		OD2		C		M (1)		H	
	IN	MM	IN	MM	IN	MM	IN	MM	IN	MM
5 × 4	5.56	141.3	4.5	114.3	4.88	124	4.62	117	5	127
5 × 3½	5.56	141.3	4	101.6	4.88	124	4.5	114	5	127
5 × 3	5.56	141.3	3.5	88.9	4.88	124	4.38	111	5	127
5 × 2½	5.56	141.3	2.88	73	4.88	124	4.25	108	5	127
5 × 2	5.56	141.3	2.38	60.3	4.88	124	4.12	105	5	127
5 × 1½	5.56	141.3	1.9	48.3	4.88	124	*	*	5	127
5 × 1¼	5.56	141.3	1.66	42.2	4.88	124	*	*	5	127
6 × 5	6.62	168.3	5.56	141.3	5.62	143	5.38	137	5.5	140
6 × 4	6.62	168.3	4.5	114.3	5.62	143	5.12	130	5.5	140
6 × 3½	6.62	168.3	4	101.6	5.62	143	5	127	5.5	140
6 × 3	6.62	168.3	3.5	88.9	5.62	143	4.88	124	5.5	140
6 × 2½	6.62	168.3	2.88	73	5.62	143	4.75	121	5.5	140
6 × 2	6.62	168.3	2.38	60.3	5.62	143	*	*	5.5	140
8 × 6	8.62	219.1	6.62	168.3	7	178	6.62	168	6	152
8 × 5	8.62	219.1	5.56	141.3	7	178	6.38	162	6	152
8 × 4	8.62	219.1	4.5	114.3	7	178	6.12	156	6	152
8 × 3½	8.62	219.1	4	101.6	7	178	6	152	6	152
8 × 3	8.62	219.1	3.5	88.9	7	178	*	*	6	152
10 × 8	10.75	273	8.62	219.1	8.5	216	8	203	7	178
10 × 6	10.75	273	6.62	168.3	8.5	216	7.62	194	7	178
10 × 5	10.75	273	5.56	141.3	8.5	216	7.5	191	7	178
10 × 4	10.75	273	4.5	114.3	8.5	216	7.25	184	7	178
10 × 3	10.75	273	3.5	88.9	8.5	216	*	*	7	178
12 × 10	12.75	323.8	10.75	273	10	254	9.5	241	8	203
12 × 8	12.75	323.8	8.62	219.1	10	254	9	229	8	203
12 × 6	12.75	323.8	6.62	168.3	10	254	8.62	219	8	203
12 × 5	12.75	323.8	5.56	141.3	10	254	8.5	216	8	203
12 × 4	12.75	323.8	4.5	114.3	10	254	*	*	8	203
14 × 12	14	355.6	12.75	323.8	11	279	10.62	270	13	330
14 × 10	14	355.6	10.75	273	11	279	10.12	257	13	330
14 × 8	14	355.6	8.62	219.1	11	279	9.75	248	13	330
14 × 6	14	355.6	6.62	168.3	11	279	9.38	238	13	330
14 × 5	14	355.6	5.56	141.3	11	279	*	*	13	330
16 × 14	16	406.4	14	355.6	12	305	12	305	14	356
16 × 12	16	406.4	12.75	323.8	12	305	11.62	295	14	356
16 × 10	16	406.4	10.75	273	12	305	11.12	283	14	356
16 × 8	16	406.4	8.62	219.1	12	305	10.75	273	14	356
16 × 6	16	406.4	6.62	168.3	12	305	10.38	264	14	356
18 × 16	18	457	16	406.4	13.5	343	13	330	15	381

NOTE:
(1) Outlet dimensions M for run sizes NPS 14 and larger is recommended but not required.

Wrought Steel Buttwelding Fittings (ASME)
Reducing Tees and Concentric & Eccentric Reducers

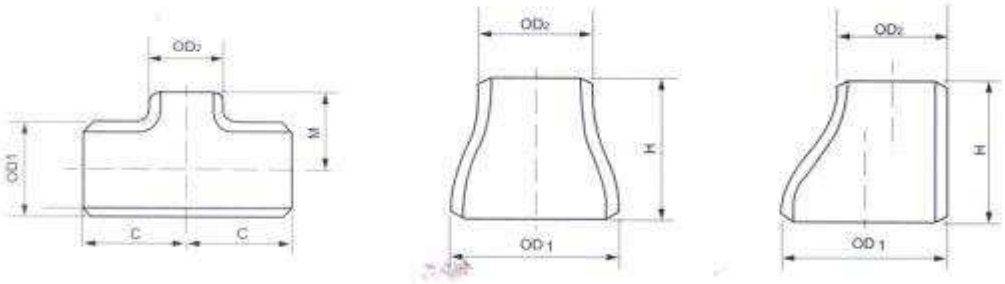

ASME B16.9

*Zibo Wel-fit Standards

Nominal Pipe Size (NPS)	Outside Diameter at Bevel				Center-to-End				End-to-End	
	OD1		OD2		C		M (1)		H	
	IN	MM	IN	MM	IN	MM	IN	MM	IN	MM
18 × 14	18	457	14	355.6	13.5	343	13	330	15	381
18 × 12	18	457	12.75	323.8	13.5	343	12.62	321	15	381
18 × 10	18	457	10.75	273	13.5	343	12.12	308	15	381
18 × 8	18	457	8.62	219.1	13.5	343	11.75	298	15	381
20 × 18	20	508	18	457.2	15	381	14.5	368	20	508
20 × 16	20	508	16	406.4	15	381	14	356	20	508
20 × 14	20	508	14	355.6	15	381	14	356	20	508
20 × 12	20	508	12.75	323.8	15	381	13.62	346	20	508
20 × 10	20	508	10.75	273	15	381	13.12	333	20	508
20 × 8	20	508	8.62	219.1	15	381	12.75	324	20	508
22 × 20	22	559	20	508	16.5	419	16	406	20	508
22 × 18	22	559	18	457.2	16.5	419	15.5	394	20	508
22 × 16	22	559	16	406.4	16.5	419	15	381	20	508
22 × 14	22	559	14	355.6	16.5	419	15	381	20	508
22 × 12	22	559	12.75	323.8	16.5	419	14.62	371	20	508
22 × 10	22	559	10.75	273	16.5	419	14.12	359	20	508
24 × 22	24	610	22	558.8	17	432	17	432	20	508
24 × 20	24	610	20	508	17	432	17	432	20	508
24 × 18	24	610	18	457.2	17	432	16.5	419	20	508
24 × 16	24	610	16	406.4	17	432	16	406	20	508
24 × 14	24	610	14	355.6	17	432	16	406	20	508
24 × 12	24	610	12.75	323.8	17	432	15.62	397	20	508
24 × 10	24	610	10.75	273	17	432	15.12	384	20	508
26 × 24	26	660	24	609.6	19.5	495	19	483	24	610
26 × 22	26	660	22	558.8	19.5	495	18.5	470	24	610
26 × 20	26	660	20	508	19.5	495	18	457	24	610
26 × 18	26	660	18	457.2	19.5	495	17.5	444	24	610
26 × 16	26	660	16	406.4	19.5	495	17	432	24	610
26 × 14	26	660	14	355.6	19.5	495	17	432	24	610
26 × 12	26	660	12.75	323.8	19.5	495	16.62	422	24	610
28 × 26	28	711	26	660.4	20.5	521	20.5	521	24	610
28 × 24	28	711	24	609.6	20.5	521	20	508	24	610
28 × 22	28	711	22	558.8	20.5	521	19.5	495	24	610
28 × 20	28	711	20	508	20.5	521	19	483	24	610
28 × 18	28	711	18	457.2	20.5	521	18.5	470	24	610
28 × 16	28	711	16	406.4	20.5	521	18	457	24	610
28 × 14	28	711	14	355.6	20.5	521	18	457	24	610
28 × 12	28	711	12.75	323.8	20.5	521	17.62	448	24	610
30 × 28	30	762	28	711.2	22	559	21.5	546	24	610

NOTE

(1) Outlet dimensions M for run sizes NPS 14 and larger is recommended but not required

Wrought Steel Buttwelding Fittings (ASME)
Reducing Tees and Concentric & Eccentric Reducers

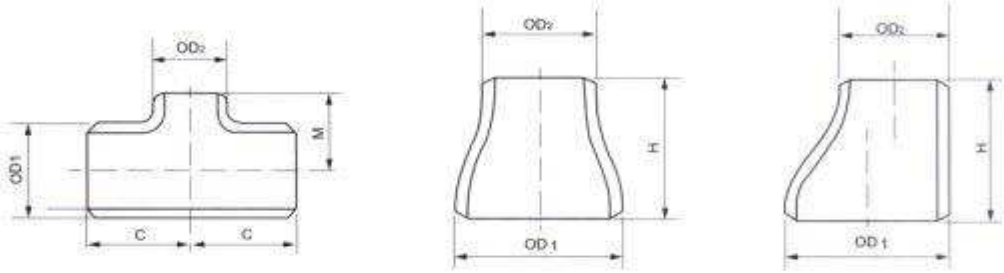

ASME B16.9

*Zibo Wel-fit Standards

Nominal Pipe Size (NPS)	Outside Diameter at Bevel				Center-to-End				End-to-End	
	OD1		OD2		C		M (1)		H	
	IN	MM	IN	MM	IN	MM	IN	MM	IN	MM
30 × 26	30	762	26	660.4	22	559	21.5	546	24	610
30 × 24	30	762	24	609.6	22	559	21	533	24	610
30 × 22	30	762	22	558.8		559	20.5	521	24	610
30 × 20	30	762	20	508	22	559	20	508	24	610
30 × 18	30	762	18	457.2	22	559	19.5	495	24	610
30 × 16	30	762	16	406.4	22	559	19	483	24	610
30 × 14	30	762	14	355.6	22	559	19	483	24	610
30 × 12	30	762	12.75	323.8	22	559	18.62	473	24	610
30 × 10	30	762	10.75	273	22	559	18.12	460	24	610
32 × 30	32	813	30	762	23.5	597	23	584	24	610
32 × 28	32	813	28	711.2	23.5	597	22.5	572	24	610
32 × 26	32	813	26	660.4	23.5	597	22.5	572	24	610
32 × 24	32	813	24	609.6	23.5	597	22	559	24	610
32 × 22	32	813	22	558.8	23.5	597	21.5	546	24	610
32 × 20	32	813	20	508	23.5	597	21	533	24	610
32 × 18	32	813	18	457.2	23.5	597	20.5	521	24	610
32 × 16	32	813	16	406.4	23.5	597	20	508	24	610
32 × 14	32	813	14	355.6	23.5	597	20	508	24	610
34 × 32	34	864	32	812.8	25	635	24.5	622	24	610
34 × 30	34	864	30	762	25	635	24	610	24	610
34 × 28	34	864	28	711.2	25	635	23.5	597	24	610
34 × 26	34	864	26	660.4	25	635	23.5	597	24	610
34 × 24	34	864	24	609.6	25	635	23	584	24	610
34 × 22	34	864	22	558.8	25	635	22.5	572	24	610
34 × 20	34	864	20	508	25	635	22	559	24	610
34 × 18	34	864	18	457.2	25	635	21.5	546	24	610
34 × 16	34	864	16	406.4	25	635	21	533	24	610
36 × 34	36	914	34	863.6	26.5	673	26	660	24	610
36 × 32	36	914	32	812.8	26.5	673	25.5	648	24	610
36 × 30	36	914	30	762	26.5	673	25	635	24	610
36 × 28	36	914	28	711.2	26.5	673	24.5	622	24	610
36 × 26	36	914	26	660.4	26.5	673	24.5	622	24	610
36 × 24	36	914	24	609.6	26.5	673	24	610	24	610
36 × 22	36	914	22	558.8	26.5	673	23.5	597	24	610
36 × 20	36	914	20	508	26.5	673	23	584	24	610
36 × 18	36	914	18	457.2	26.5	673	22.5	572	24	610
36 × 16	36	914	16	406.4	26.5	673	22	559	24	610
38 × 36	38	965	36	914.4	28	711	28	711	24	610
38 × 34	38	965	34	863.6	28	711	27.5	698	24	610

NOTE:

(1) Outlet dimensions M for run sizes NPS 14 and larger is recommended but not required.

Wrought Steel Buttwelding Fittings (ASME)
Reducing Tees and Concentric & Eccentric Reducers

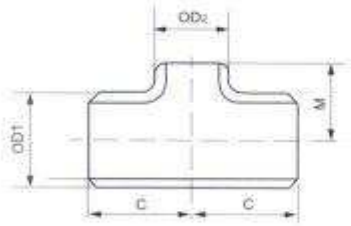

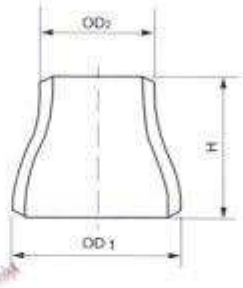

ASME B16.9

*Zibo Wel-fit Standards

Nominal Pipe Size (NPS)	Outside Diameter at Bevel				Center-to-End				End-to-End	
	OD1		OD2		C		M (1)		H	
	N	MM	IN	MM	IN	MM	IN	MM	IN	MM
38 × 32	38	965	32	812.8	28	711	27	686	24	610
38 × 30	38	965	30	762	28	711	26.5	673	24	610
38 × 28	38	965	28	711.2	28	711	25.5	648	24	610
38 × 26	38	965	26	660.4	28	711	25.5	648	24	610
38 × 24	38	965	24	609.6	28	711	25	635	24	610
38 × 22	38	965	22	558.8	28	711	24.5	622	24	610
38 × 20	38	965	20	508	28	711	24	610	24	610
38 × 18	38	965	18	457.2	28	711	23.5	597	24	610
40 × 38	40	1016	38	965.2	29.5	749	29.5	749	24	610
40 × 36	40	1016	36	914.4	29.5	749	29	737	24	610
40 × 34	40	1016	34	863.6	29.5	749	28.5	724	24	610
40 × 32	40	1016	32	812.8	29.5	749	28	711	24	610
40 × 30	40	1016	30	762	29.5	749	27.5	698	24	610
40 × 28	40	1016	28	711.2	29.5	749	26.5	673	24	610
40 × 26	40	1016	26	660.4	29.5	749	26.5	673	24	610
40 × 24	40	1016	24	609.6	29.5	749	26	660	24	610
40 × 22	40	1016	22	558.8	29.5	749	25.5	648	24	610
40 × 20	40	1016	20	508	29.5	749	25	635	24	610
40 × 18	40	1016	18	457.2	29.5	749	24.5	622	24	610
42 × 40	42	1067	40	1016	30	762	28	711	24	610
42 × 38	42	1067	38	965.2	30	762	28	711	24	610
42 × 36	42	1067	36	914.4	30	762	28	711	24	610
42 × 34	42	1067	34	863.6	30	762	28	711	24	610
42 × 32	42	1067	32	812.8	30	762	28	711	24	610
42 × 30	42	1067	30	762	30	762	28	711	24	610
42 × 28	42	1067	28	711.2	30	762	27.5	698	24	610
42 × 26	42	1067	26	660.4	30	762	27.5	698	24	610
42 × 24	42	1067	24	609.6	30	762	26	660	24	610
42 × 22	42	1067	22	558.8	30	762	26	660	24	610
42 × 20	42	1067	20	508	30	762	26	660	24	610
42 × 18	42	1067	18	457.2	30	762	25.5	648	24	610
42 × 16	42	1067	16	406.4	30	762	25	635	24	610
44 × 42	44	1118	42	1066.8	32	813	30	762	24	610
44 × 40	44	1118	40	1016	32	813	29.5	749	24	610
44 × 38	44	1118	38	965.2	32	813	29	737	24	610
44 × 36	44	1118	36	914.4	32	813	28.5	724	24	610
44 × 34	44	1118	34	863.6	32	813	28.5	724	24	610
44 × 32	44	1118	32	812.8	32	813	28	711	24	610
44 × 30	44	1118	30	762	32	813	28	711	24	610

NOTE:
(1) Outlet dimensions M for run sizes NPS 14 and larger is recommended but not required.

Wrought Steel Buttwelding Fittings (ASME)
Reducing Tees and Concentric & Eccentric Reducers

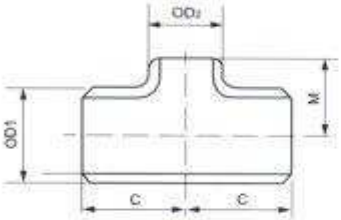

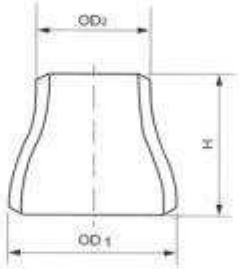

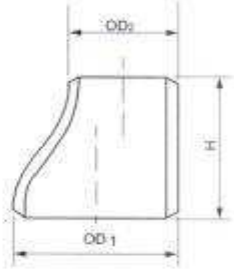

ASME B16.9

*Zibo Wel-fit Standards

Nominal Pipe Size (NPS)	Outside Diameter at Bevel				Center-to-End				End-to-End	
	OD1		OD2		C		M (1)		H	
	IN	MM	IN	MM	IN	MM	IN	MM	IN	MM
44 × 28	44	1118	28	711.2	32	813	27.5	698	24	610
44 × 26	44	1118	26	660.4	32	813	27.5	698	24	610
44 × 24	44	1118	24	609.6	32	813	27.5	698	24	610
44 × 22	44	1118	22	558.8	32	813	27	686	24	610
44 × 20	44	1118	20	508	32	813	27	686	24	610
46 × 44	46	1168	44	1117.6	33.5	851	31.5	800	28	711
46 × 42	46	1168	42	1066.8	33.5	851	31	787	28	711
46 × 40	46	1168	40	1016	33.5	851	30.5	775	28	711
46 × 38	46	1168	38	965.2	33.5	851	30	762	28	711
46 × 36	46	1168	36	914.4	33.5	851	30	762	28	711
46 × 34	46	1168	34	863.6	33.5	851	29.5	749	28	711
46 × 32	46	1168	32	812.8	33.5	851	29.5	749	28	711
46 × 30	46	1168	30	762	33.5	851	29	737	28	711
46 × 28	46	1168	28	711.2	33.5	851	29	737	28	711
46 × 26	46	1168	26	660.4	33.5	851	29	737	28	711
46 × 24	46	1168	24	609.6	33.5	851	28.5	724	28	711
46 × 22	46	1168	22	558.8	33.5	851	28.5	724	28	711
48 × 46	48	1219	46	1168.4	35	889	33	838	28	711
48 × 44	48	1219	44	1117.6	35	889	33	838	28	711
48 × 42	48	1219	42	1066.8	35	889	32	813	28	711
48 × 40	48	1219	40	1016	35	889	32	813	28	711
48 × 38	48	1219	38	965.2	35	889	32	813	28	711
48 × 36	48	1219	36	914.4	35	889	31	787	28	711
48 × 34	48	1219	34	863.6	35	889	31	787	28	711
48 × 32	48	1219	32	812.8	35	889	31	787	28	711
48 × 30	48	1219	30	762	35	889	30	762	28	711
48 × 28	48	1219	28	711.2	35	889	30	762	28	711
48 × 26	48	1219	26	660.4	35	889	30	762	28	711
48 × 24	48	1219	24	609.6	35	889	29	737	28	711
48 × 22	48	1219	22	558.8	35	889	29	737	28	711

NOTES

(1) Outlet dimensions M for run sizes NPS 14 and larger is recommended but not required.

Steel Butt-Welding Pipe Fittings (JIS)
90 & 45 Elbows

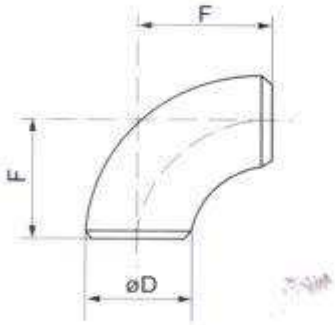

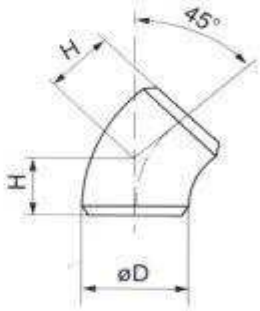

JIS B2311

*Zibo Wel-fit Standards

Unit: mm

Nominal Pipe Size (NPS)		Outside Diameter D	Center to End			
			90 Elbows(F)		45 Elbows(H)	
A	B		Long	Short	Long	Short*
15	1/2	21.7	38.1	-	15.8	-
20	3/4	27.2	38.1	-	15.8	-
25	1	34.0	38.1	25.4	15.8	10.5
32	1 1/2	42.7	47.6	31.8	19.7	13.2
40	1 1/4	48.6	57.2	38.1	23.7	15.8
50	2	60.5	76.2	50.8	31.6	21.0
65	2 1/2	76.3	95.3	63.5	39.5	26.3
80	3	89.1	114.3	76.2	47.3	31.6
90	3 1/2	101.6	133.4	88.9	55.3	36.8
100	4	114.3	152.4	101.6	63.1	42.1
125	5	139.8	190.5	127.0	78.9	52.6
150	6	165.2	228.6	152.4	94.7	63.1
200	8	216.3	304.8	203.2	126.3	84.2
250	10	267.4	381.0	254.0	157.8	105.2
300	12	318.5	457.2	304.8	189.4	126.3
350	14	355.6	533.4	355.6	220.9	147.3
400	16	406.4	609.6	406.4	252.5	168.4
450	18	457.2	685.8	457.2	284.1	189.4
500	20	508.0	762.0	508.0	315.6	210.4
550	22	558.8	838.2	558.8	347.2	231.5
600	24	609.6	914.4	609.6	378.7	252.5
650	26	660.4	990.6	660.4	410.3	273.6
700	28	711.2	1066.8	711.2	441.9	294.6
750	30	762.0	1143.0	762.0	473.4	315.7
800	32	812.8	1219.2	812.8	505.0	336.7
850	34	863.6	1295.4	863.6	536.6	357.7
900	36	914.4	1371.6	914.4	568.1	378.8
950	38	965.2	1447.8	965.2	599.7	399.8
1000	40	1016.0	1524.0	1016.0	631.2	420.9
1050	42	1066.8	1600.2	1066.8	662.8	441.9
1100	44	1117.6	1676.4	1117.6	694.4	463.0
1150	46	1168.4	1752.6	1168.4	725.9	484.0
1200	48	1219.2	1828.8	1219.2	757.5	505.1

Steel Butt-Welding Pipe Fittings (JIS)
180 Elbows, Caps, & Tees

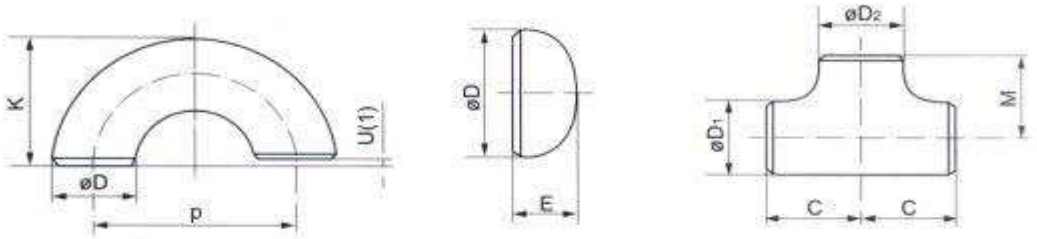

JIS B2311

Unit: mm

Nominal Pipe Size (NPS)		Outside Diameter D	Center to Center		End to End			Center to End	
			180 Elbows (P)		180 Elbows (K)		Caps	Tees	
A	B		Long	Shot	Long	Shot	E (2)	C	M
15	1/2	21.7	76.2	-	49.0	-	25.4	25.4	25.4
20	1/4	27.2	76.2	-	51.7	-	25.4	28.6	28.6
25	1	34.0	76.2	50.8	55.1	42.4	38.1	38.1	38.1
32	1 1/4	42.7	95.2	63.6	69.0	53.2	38.1	47.6	47.6
40	1 1/2	48.6	114.4	76.2	81.5	62.4	38.1	57.2	57.2
50	2	60.5	152.4	101.6	106.5	81.1	38.1	63.5	63.5
65	2 1/2	76.3	190.6	127.0	133.5	101.7	38.1	76.2	76.2
80	3	89.1	228.6	152.4	158.9	120.8	50.8	85.7	85.7
90	3 1/2	101.6	266.8	177.8	184.2	139.7	63.5	95.3	95.3
100	4	114.3	304.8	203.2	209.6	158.8	63.5	104.8	104.8
125	5	139.8	381.0	254.0	260.4	196.9	76.2	123.8	123.8
150	6	165.2	457.2	304.8	311.2	235.0	88.9	142.9	142.9
200	8	216.3	609.6	406.4	413.0	311.4	101.6	177.8	177.8
250	10	267.4	762.0	508.0	514.7	387.7	127.0	215.9	215.9
300	12	318.5	914.4	609.6	616.5	464.1	152.4	254.0	254.0
350	14	355.6	1066.8	711.2	711.2	533.4	165.1	279.4	279.4
400	16	406.4	1219.2	812.8	812.8	609.6	177.8	304.8	304.8
450	18	457.2	1371.6	914.4	914.4	685.8	203.2	342.9	342.9
500	20	508.0	1524.0	1016.0	1016.0	762.0	228.6	381.0	381.0
550	22	558.8	-	-	-	-	-	419.1	419.1
600	24	609.6	-	-	-	-	-	431.8	431.8
650	26	660.4	-	-	-	-	-	495.3	495.3
700	28	711.2	-	-	-	-	-	520.7	520.7
750	30	762.0	-	-	-	-	-	558.8	558.8
800	32	812.8	-	-	-	-	-	596.9	596.9
850	34	863.6	-	-	-	-	-	635.0	635.0
900	36	914.4	-	-	-	-	-	673.1	673.1
950	38	965.2	-	-	-	-	-	711.2	711.2
1000	40	1016.0	-	-	-	-	-	749.3	749.3
1050	42	1066.8	-	-	-	-	-	762.0	711.2
1100	44	1117.6	-	-	-	-	-	812.8	762.0
1150	46	1168.4	-	-	-	-	-	850.9	800.1
1200	48	1219.2	-	-	-	-	-	889.0	838.2

NOTES:

(1) For alignment of the end faces U see the table on page 35.

(2) Only SGP is applicable to the dimension E.

Steel Butt-Welding Pipe Fittings (JIS)
Lap Joint Stub Ends

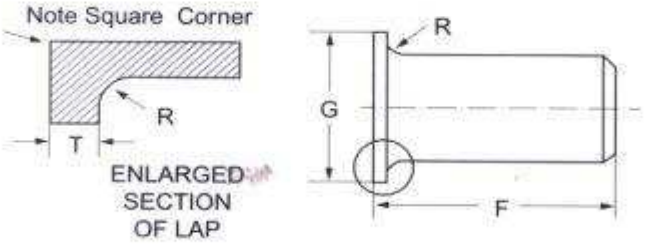

JIS B2220
JPI-7S-15

Unit: mm

Nominal Pipe Size (NPS)		Outside Diameter	Diameter of Lap (G)			Length (F)		Radius of Fillet (R)	
			JIS		JPI	JIS	JPI	JIS	JPI
A	B	D	5K	10K					
15	1/2	21.7	44	51	35	30	50	3	3.2
20	1/4	27.2	49	56	43	30	50	3	3.2
25	1	34	59	67	51	50	50	3	3.2
32	1 1/4	42.7	70	76	64	50	50	4	4.8
40	1 1/2	48.6	75	81	73	50	50	4	6.4
50	2	60.5	85	96	92	50	65	4	7.9
65	2 1/2	76.3	110	116	105	50	65	5	7.9
80	3	89.1	121	126	127	50	65	5	9.5
90	3 1/2	-	-	-	-	-	-	-	-
100	4	114.3	141	151	157	50	75	5	11.1
125	5	139.8	176	182	186	50	75	6	11.1
150	6	165.2	206	212	216	50	90	6	12.7
200	8	216.3	252	262	270	65	100	6	12.7
250	10	267.4	317	324	324	65	125	6	12.7
300	12	318.5	360	368	381	65	150	8	12.7
350	14	355.6	403	413	-	150	-	8	-
400	16	406.4	463	475	-	150	-	8	-
450	18	457.2	523	530	-	150	-	8	-
500	20	508	573	585	-	150	-	8	-
550	22	558.8	630	640	-	150	-	8	-
600	24	609.6	680	690	-	150	-	8	-

Steel Butt-Welding Pipe Fittings (JIS)
Reducing Tees and Concentric & Eccentric Reducers

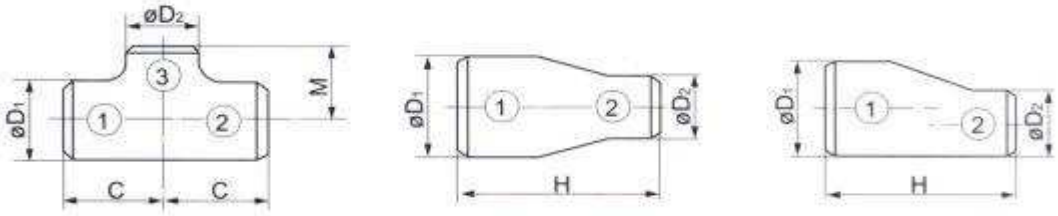

JIS B2311 *Zibo Wel-fit Standards Unit: mm

Nominal Pipe Size (NPS)		Outside Diameter		Reducing Tees Center-to-End		Reducers End-to-End
A	B	D1	D2	C	M	H
20 × 15	3/4 × 1/2	27.2	21.7	28.6	28.6	38.1
25 × 20	1 × 3/4	34.0	27.2	38.1	38.1	50.8
25 × 15	1 × 1/2	34.0	21.7	38.1	38.1	50.8
32 × 25	1 1/4 × 1	42.7	34.0	47.6	47.6	50.8
32 × 20	1 1/4 × 3/4	42.7	27.2	47.6	47.6	50.8
32 × 15	1 1/4 × 1/2	42.7	21.7	47.6	47.6	50.8
40 × 32	1 1/2 × 1 1/4	48.6	42.7	57.2	57.2	63.5
40 × 25	1 1/2 × 1	48.6	34.0	57.2	57.2	63.5
40 × 20	1 1/2 × 3/4	48.6	27.2	57.2	57.2	63.5
40 × 15	1 1/2 × 1/2	48.6	21.7	57.2	57.2	63.5
50 × 40	2 × 1 1/2	60.5	48.6	63.5	60.3	76.2
50 × 32	2 × 1 1/4	60.5	42.7	63.5	57.2	76.2
50 × 25	2 × 1	60.5	34.0	63.5	50.8	76.2
50 × 20	2 × 3/4	60.5	27.2	63.5	44.5	76.2
50 × 15	2 × 1/2	60.5	21.7	63.5	*	76.2
65 × 50	2 1/2 × 2	76.3	60.5	76.2	69.9	88.9
65 × 40	2 1/2 × 1 1/2	76.3	48.6	76.2	66.7	88.9
65 × 32	2 1/2 × 1 1/4	76.3	42.7	76.2	63.5	88.9
65 × 25	2 1/2 × 1	76.3	34.0	76.2	57.2	88.9
65 × 20	2 1/2 × 3/4	76.3	27.2	76.2	*	88.9
65 × 15	2 1/2 × 1/2	76.3	21.7	76.2	*	88.9
80 × 65	3 × 2 1/2	89.1	76.3	85.7	82.6	88.9
80 × 50	3 × 2	89.1	60.5	85.7	76.2	88.9
80 × 40	3 × 1 1/2	89.1	48.6	85.7	73.0	88.9
80 × 32	3 × 1 1/4	89.1	42.7	85.7	69.9	88.9
80 × 25	3 × 1	89.1	34.0	85.7	*	88.9
80 × 20	3 × 3/4	89.1	27.2	85.7	*	88.9
80 × 15	3 × 1/2	89.1	21.7	85.7	*	88.9
90 × 80	3 1/2 × 3	101.6	89.1	95.3	92.1	101.6
90 × 65	3 1/2 × 2 1/2	101.6	76.3	95.3	88.9	101.6
90 × 50	3 1/2 × 2	101.6	60.5	95.3	82.9	101.6
90 × 40	3 1/2 × 1 1/2	101.6	48.6	95.3	79.4	101.6
90 × 32	3 1/2 × 1 1/4	101.6	42.7	95.3	*	101.6
100 × 90	4 × 3 1/2	114.3	101.6	104.8	101.6	101.6
100 × 80	4 × 3	114.3	89.1	104.8	98.4	101.6
100 × 65	4 × 2 1/2	114.3	76.3	104.8	95.3	101.6
100 × 50	4 × 2	114.3	60.5	104.8	88.9	101.6
100 × 40	4 × 1 1/2	114.3	48.6	104.8	85.7	101.6
100 × 32	4 × 1 1/4	114.3	42.7	104.8	*	101.6
100 × 25	4 × 1	114.3	34.0	104.8	*	101.6

Steel Butt-Welding Pipe Fittings (JIS)
Reducing Tees and Concentric & Eccentric Reducers

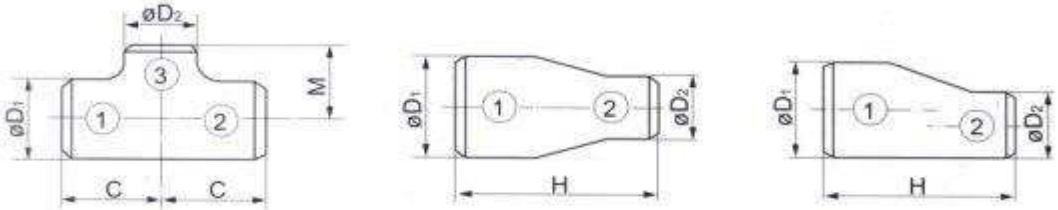

JIS B2311

*Zibo Wel-fit Standards

Unit: mm

Nominal Pipe Size (NPS)		Outside Diameter		Reducing Tees Center-to-End		Reducers End-to-End
A	B	D1	D2	C	M	H
125 × 100	5 × 4	139.8	114.3	123.8	117.5	127.0
125 × 90	5 × 3½	139.8	101.6	123.8	114.3	127.0
125 × 80	5 × 3	139.8	89.1	123.8	111.1	127.0
125 × 65	5 × 2½	139.8	76.3	123.8	108.0	127.0
125 × 50	5 × 2	139.8	60.5	123.8	104.8	127.0
125 × 40	5 × 1½	139.8	48.6	123.8	*	127.0
125 × 32	5 × 1¼	139.8	42.7	123.8	*	127.0
150 × 125	6 × 5	165.2	139.8	142.9	136.5	139.7
150 × 100	6 × 4	165.2	114.3	142.9	130.2	139.7
150 × 90	6 × 3½	165.2	101.6	142.9	127.0	139.7
150 × 80	6 × 3	165.2	89.1	142.9	123.8	139.7
150 × 65	6 × 2½	165.2	76.3	142.9	120.7	139.7
150 × 50	6 × 2	165.2	60.5	142.9	*	139.7
200 × 150	8 × 6	216.3	165.2	177.8	168.3	152.4
200 × 125	8 × 5	216.3	139.8	177.8	161.9	152.4
200 × 100	8 × 4	216.3	114.3	177.8	155.6	152.4
200 × 90	8 × 3?	216.3	101.6	177.8	152.4	152.4
200 × 80	8 × 3	216.3	89.1	177.8	152.4	152.4
250 × 200	10 × 8	267.4	216.3	215.9	203.2	177.8
250 × 150	10 × 6	267.4	165.2	215.9	193.7	177.8
250 × 125	10 × 5	267.4	139.8	215.9	190.5	177.8
250 × 100	10 × 4	267.4	114.3	215.9	184.2	177.8
250 × 80	10 × 3	267.4	89.1	215.9	*	177.8
300 × 250	12 × 10	318.5	267.4	254.0	241.3	203.2
300 × 200	12 × 8	318.5	216.3	254.0	228.6	203.2
300 × 150	12 × 6	318.5	165.2	254.0	219.1	203.2
300 × 125	12 × 5	318.5	139.8	254.0	215.9	203.3
300 × 100	12 × 4	318.5	114.3	254.0	*	203.3
350 × 300	14 × 12	355.6	318.5	279.4	269.9	330.2
350 × 250	14 × 10	355.6	267.4	279.4	257.2	330.2
350 × 200	14 × 8	355.6	216.3	279.4	247.7	330.2
350 × 150	14 × ¡6	355.6	165.2	279.4	238.1	330.2
350 × 125	14 × 5	355.6	139.8	279.4	*	330.2
400 × 350	16 × 14	406.4	355.6	304.8	304.8	355.6
400 × 300	16 × 12	406.4	318.5	304.8	295.3	355.6
400 × 250	16 × 10	406.4	267.4	304.8	282.6	355.6
400 × 200	16 × 8	406.4	216.3	304.8	273.1	355.6
400 × 150	16 × 6	406.4	165.2	304.8	263.5	355.6

Steel Butt-Welding Pipe Fittings (JIS)
Reducing Tees and Concentric & Eccentric Reducers

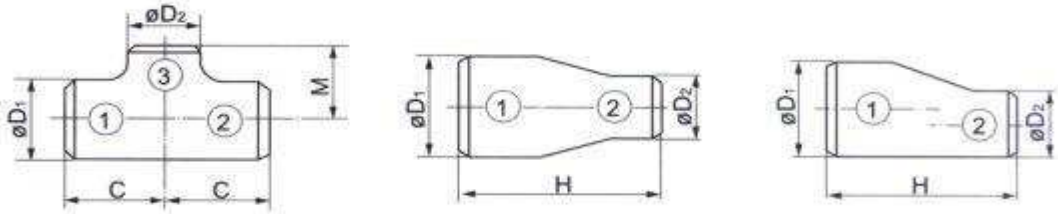

JIS B2311 *Zibo Wel-fit Standards Unit: mm

Nominal Pipe Size (NPS)		Outside Diameter		Reducing Tees Center-to-End		Reducers End-to-End
A	B	D1	D2	C	M	H
450 × 400	18 × 16	457.2	406.4	342.9	330.2	381.0
450 × 350	18 × 14	457.2	355.6	342.9	330.2	381.0
450 × 300	18 × 12	457.2	318.5	342.9	320.7	381.0
450 × 250	18 × 10	457.2	267.4	342.9	308.0	381.0
450 × 200	18 × 8	457.2	216.3	342.9	298.0	381.0
500 × 450	20 × 18	508.0	457.2	381.0	368.3	508.0
500 × 400	20 × 16	508.0	406.4	381.0	355.6	508.0
500 × 350	20 × 14	508.0	355.6	381.0	355.6	508.0
500 × 300	20 × 12	508.0	318.5	381.0	346.1	508.0
500 × 250	20 × 10	508.0	267.4	381.0	333.4	508.0
500 × 200	20 × 8	508.0	216.3	381.0	523.9	508.0
550 × 500	22 × 20	558.8	508.0	419.1	406.4	508.0
550 × 450	22 × 18	558.8	457.2	419.1	393.7	508.0
550 × 400	22 × 16	558.8	406.4	419.1	381.0	508.0
550 × 350	22 × 14	558.8	355.6	419.1	381.0	508.0
600 × 550	24 × 22	609.6	558.8	431.8	431.8	508.0
600 × 500	24 × 20	609.6	508.0	431.8	431.8	508.0
600 × 450	24 × 18	609.6	457.2	431.8	419.1	508.0
600 × 400	24 × 16	609.6	406.4	431.8	406.4	508.0
600 × 350	24 × 14	609.6	355.6	431.8	406.4	508.0
600 × 300	24 × 12	609.6	318.5	431.8	397.0	508.0
650 × 600	26 × 24	660.4	609.6	495.3	482.6	609.6
650 × 550	26 × 22	660.4	558.8	495.3	469.9	609.6
650 × 500	26 × 20	660.4	508.0	495.3	457.2	609.6
650 × 450	26 × 18	660.4	457.2	495.3	444.0	609.6
700 × 650	28 × 26	711.2	660.4	520.7	520.7	609.6
700 × 600	28 × 24	711.2	609.6	520.7	508.0	609.6
700 × 550	28 × 22	711.2	558.8	520.7	495.3	609.6
700 × 500	28 × 20	711.2	508.0	520.7	483.0	609.6
750 × 700	30 × 28	762.0	711.2	558.8	546.1	609.6
750 × 650	30 × 26	762.0	660.4	558.8	546.1	609.6
750 × 600	30 × 24	762.0	609.4	558.8	533.4	609.6
750 × 550	30 × 22	762.0	558.8	558.8	520.7	609.6
800 × 750	32 × 30	812.8	762.0	596.9	584.2	609.6
800 × 700	32 × 28	812.8	711.2	596.9	571.5	609.6
800 × 650	32 × 26	812.8	660.4	596.9	571.5	609.6
800 × 600	32 × 24	812.8	609.6	596.9	559.0	609.6

Steel Butt-Welding Pipe Fittings (JIS)
Reducing Tees and Concentric & Eccentric Reducers

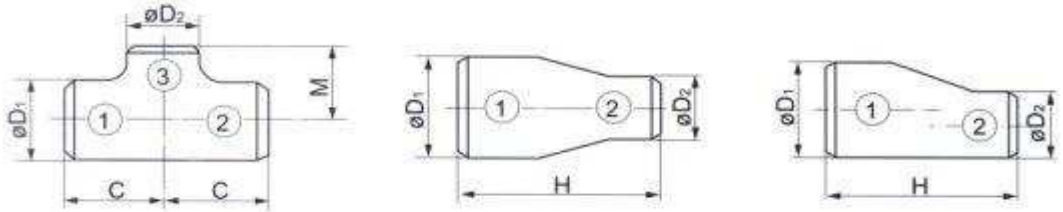

JIS B2311

*Zibo Wel-fit Standards

Unit: mm

Nominal Pipe Size (NPS)		Outside Diameter		Reducing Tees Center-to-End		Reducers End-to-End
A	B	D1	D2	C	M	H
850 × 800	34 × 32	863.6	812.8	635.0	622.3	609.6
850 × 750	34 × 30	863.6	762.0	635.0	609.6	609.6
850 × 700	34 × 28	863.6	711.2	635.0	596.9	609.6
850 × 650	34 × 26	863.6	660.4	635.0	596.9	609.6
900 × 850	36 × 34	914.4	863.6	673.1	660.4	609.6
900 × 800	36 × 32	914.4	812.8	673.1	647.7	609.6
900 × 750	36 × 30	914.4	762.0	673.1	635.0	609.6
900 × 700	36 × 28	914.4	711.2	673.1	622.3	609.6
950 × 900	38 × 36	965.2	914.4	711.2	711.2	609.6
950 × 850	38 × 34	965.2	863.6	711.2	698.5	609.6
950 × 800	38 × 32	965.2	812.8	711.2	685.8	609.6
950 × 750	38 × 30	965.2	762.0	711.2	673.0	609.6
1000 × 950	40 × 38	1016.0	965.2	749.3	749.3	609.6
1000 × 900	40 × 36	1016.0	914.4	749.3	736.6	609.6
1000 × 850	40 × 34	1016.0	863.6	749.3	723.9	609.6
1000 × 800	40 × 32	1016.0	812.8	749.3	711.2	609.6
1050 × 1000	42 × 40	1066.8	1016.0	762.0	711.2	609.6
1050 × 950	42 × 38	1066.8	965.2	762.0	711.2	609.6
1050 × 900	42 × 36	1066.8	914.4	762.0	711.2	609.6
1050 × 850	42 × 34	1066.8	863.6	762.0	711.2	609.6
1100 × 1050	44 × 42	1117.6	1066.8	812.8	762.0	609.6
1100 × 1000	44 × 40	1117.6	1016.0	812.8	749.3	609.6
1100 × 950	44 × 38	1117.6	965.2	812.8	736.6	609.6
1100 × 900	44 × 36	1117.6	914.4	812.8	723.9	609.6
1150 × 1100	46 × 44	1168.4	1117.6	850.9	811.1	711.2
1150 × 1050	46 × 42	1168.4	1066.8	850.9	787.4	711.2
1150 × 1000	46 × 40	1168.4	1016.0	850.9	774.7	711.2
1150 × 950	46 × 38	1168.4	965.2	850.9	762.0	711.2
1200 × 1150	48 × 46	1219.2	1168.4	889.0	838.2	711.2
1200 × 1100	48 × 44	1219.2	1117.6	889.0	838.2	711.2
1200 × 1050	48 × 42	1219.2	1066.8	889.0	812.8	711.2
1200 × 1000	48 × 40	1219.2	1016.0	889.0	812.8	711.2

Steel Butt-Welding Pipe Fittings (DIN)
Elbows, Bends, and Caps

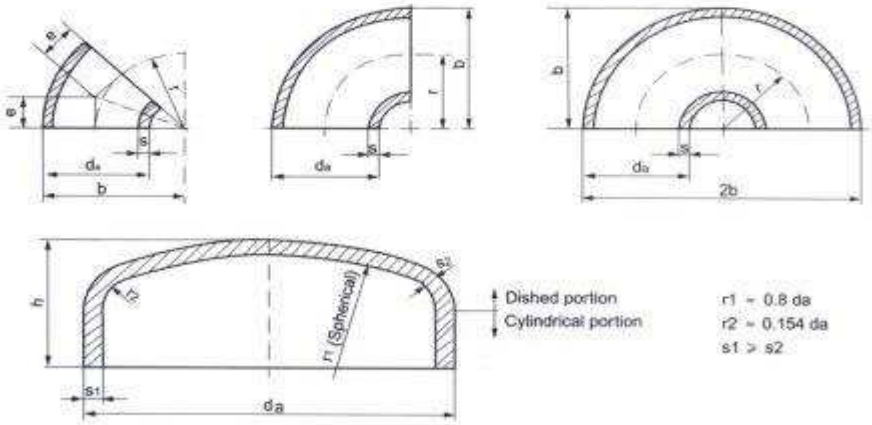

DIN 2605 DIN 2617

Unit:mm

Nominal Size DN	Outside Diameter da	Elbows and Bends						Caps h
		Type 3 – 3D			Type 5 – 5D			
		r	b	e	r	b	e	
15	21.3	28.0	38	12	42.5	53	18	25
20	26.9	29.0	43	12	57.5	71	24	25
25	33.7	38.0	56	16	72.5	90	30	38
32	42.4	48.0	69	20	92.5	114	38	38
40	48.3	57.0	82	24	107.5	132	45	38
50	60.3	76	106	32	135	165	56	38
65	76.1	95	133	39	175	213	73	38
80	88.9	114	159	47	205	250	85	51
100	114.3	152	210	63	270	327	112	64
125	139.7	190	260	79	330	400	137	76
150	168.3	229	313	95	390	474	162	89
200	219.1	305	414	126	510	620	211	102
250	273	381	518	158	650	787	269	127
300	323.9	457	619	189	775	937	321	152
350	355.6	533	711	221	850	1028	352	165
400	406.4	610	813	253	970	1173	402	178
450	457	686	914	284	1122	1350	465	203
500	508	762	1016	316	1245	1500	516	229
600	610	914	1219	379	1525	1830	632	267
700	711	1067	1422	442	1778	2133	737	267
800	813	1219	1626	505	2033	2439	842	267
900	914	1372	1829	568	2285	2742	947	267
1000	1016	1524	2032	631	2540	3048	1052	305
1200	1220	1830	2440	758	3050	3660	1263	343

Steel Butt-welding Pipe Fittings (DIN)
Tees and Concentric & Eccentric Reducers

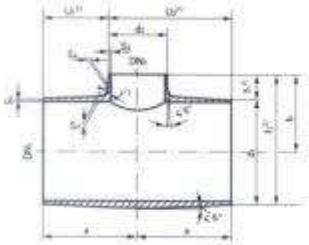

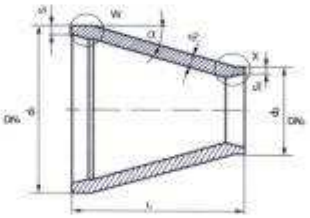

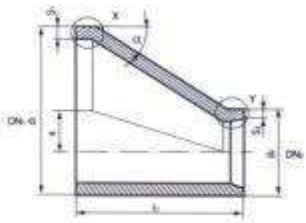

DIN 2615 DIN2616

Unit: mm

Nominal Size DN1	Outside Diameter d1	Nominal Size DN2	Outside Diameter d2	Tees		Reducers
				a	b	l1
15	21.3	15	21.3	25	25	38
20	26.9	20	26.9	29	29	38
20	26.9	15	21.3	29	29	38
25	33.7	25	33.7	38	38	50
25	33.7	20	26.9	38	38	50
25	33.7	15	21.3	38	38	50
32	42.4	32	42.4	48	48	50
32	42.4	25	33.7	48	48	50
32	42.4	20	26.9	48	48	50
32	42.4	15	21.3	48	48	50
40	48.3	40	48.3	57	57	64
40	48.3	32	42.4	57	57	64
40	48.3	25	33.7	57	57	64
40	48.3	20	26.9	57	57	64
50	60.3	50	60.3	64	64	76
50	60.3	40	48.3	64	60	76
50	60.3	32	42.4	64	57	76
50	60.3	25	33.7	64	51	76
50	60.3	20	26.9	64	44	76
65	76.1	65	76.1	76	76	90
65	76.1	50	60.3	76	70	90
65	76.1	40	48.3	76	67	90
65	76.1	32	42.4	76	64	90
65	76.1	25	33.7	76	57	90
80	88.9	80	88.9	86	86	90
80	88.9	65	76.1	86	83	90
80	88.9	50	60.3	86	76	90
80	88.9	40	48.3	86	73	90
80	88.9	32	42.4	86	70	90
100	114.3	100	114.3	105	105	100
100	114.3	80	88.9	105	98	100
100	114.3	65	76.1	105	95	100
100	114.3	50	60.3	105	89	100
100	114.3	40	48.3	105	86	100
125	139.7	125	139.7	124	124	127
125	139.7	100	114.3	124	117	127
125	139.7	80	88.9	124	111	127
125	139.7	65	76.1	124	108	127
125	139.7	50	60.3	124	105	127
150	168.3	150	168.3	143	143	140
150	168.3	125	139.7	143	137	140

Steel Butt-welding Pipe Fittings (DIN)
Tees and Concentric & Eccentric Reducers

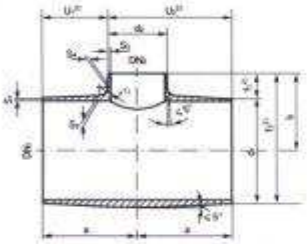

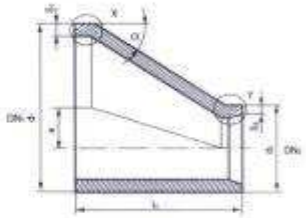

DIN 2615 DIN2616

Unit: mm

Nominal Size DN1	Outside Diameter d1	Nominal Size DN2	Outside Diameter d2	Tees		Reducers
				a	b	l1
150	168,3	100	114,3	143	130	140
150	168,3	80	88,9	143	124	140
150	168,3	65	76,1	143	121	140
200	219,1	200	219,1	178	178	152
200	219,1	150	168,3	178	168	152
200	219,1	125	139,7	178	162	152
200	219,1	100	114,3	178	156	152
200	219,1	80	88,9	178	152	152
250	273	250	273	216	216	178
250	273	200	219,1	216	203	178
250	273	150	168,3	216	194	178
250	273	125	139,7	216	191	178
250	273	100	114,3	216	184	178
300	323,9	300	323,9	254	254	203
300	323,9	250	273	254	241	203
300	323,9	200	219,1	254	229	203
300	323,9	150	168,3	254	219	203
300	323,9	125	139,7	254	216	203
350	355,6	350	355,6	279	279	330
350	355,6	300	323,9	279	270	330
350	355,6	250	273	279	257	330
350	355,6	200	219,1	279	248	330
350	355,6	150	168,3	279	238	330
400	406,4	400	406,4	305	305	355
400	406,4	350	355,6	305	305	355
400	406,4	300	323,9	305	295	355
400	406,4	250	273	305	283	355
400	406,4	200	219,1	305	273	355
400	406,4	150	168,3	305	264	355
450	457	450	457	343	343	381
450	457	400	406,4	343	330	381
450	457	350	355,6	343	330	381
450	457	300	323,9	343	321	381
450	457	250	273	343	308	381
450	457	200	219,1	343	298	381
500	508	500	508	381	381	508
500	508	450	457	381	368	508
500	508	400	406,4	381	356	508
500	508	350	355,6	381	356	508
500	508	300	323,9	381	346	508
500	508	250	273	381	333	508

Steel Butt-welding Pipe Fittings (DIN)
Tees and Concentric & Eccentric Reducers

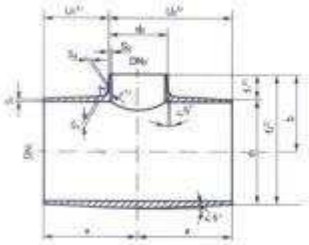

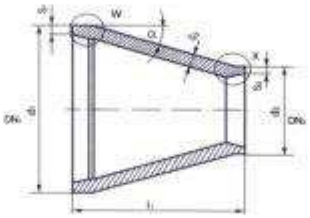

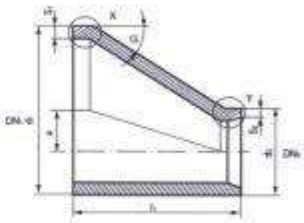

DIN 2615 DIN2616

Unit: mm

Nominal Size DN1	Outside Diameter d1	Nominal Size DN2	Outside Diameter d2	Tees		Reducers
				a	b	l1
500	508	200	219.1	381	324	508
600	610	600	610	432	432	508
600	610	500	508	432	432	508
600	610	450	457	432	419	508
600	610	400	406.4	432	406	508
600	610	350	355.6	432	406	508
600	610	300	323.9	432	397	508
600	610	250	273	432	384	508
700	711	700	711	521	521	610
700	711	600	610	521	508	610
700	711	500	508	521	483	610
700	711	450	457	521	470	610
700	711	400	406.4	521	457	610
700	711	350	355.6	521	457	610
700	711	300	323.9	521	448	610
800	813	800	813	597	597	610
800	813	700	711	597	572	610
800	813	600	610	597	559	610
800	813	500	508	597	533	610
800	813	450	457	597	521	610
800	813	400	406.4	597	508	610
800	813	350	355.6	597	508	610
900	914	900	914	673	673	610
900	914	800	813	673	648	610
900	914	700	711	673	622	610
900	914	600	610	673	610	610
900	914	500	508	673	584	610
900	914	450	457	673	572	610
900	914	400	406.4	673	559	610
1000	1016	1000	1016	749	749	610
1000	1016	900	914	749	737	610
1000	1016	800	813	749	711	610
1000	1016	700	711	749	673	610
1000	1016	600	610	749	660	610
1000	1016	500	508	749	635	610
1000	1016	450	457	749	622	610
1200	1220	1200	1220	889	838	711
1200	1220	1000	1016	889	813	711
1200	1220	900	914	889	787	711
1200	1220	800	813	889	787	711
1200	1220	700	711	889	762	711
1200	1220	600	610	889	737	711

Welding End Preparation

ASME B16.9, B16.25

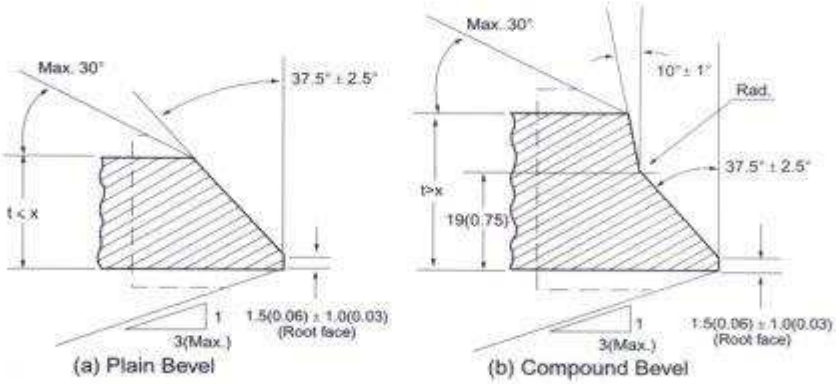

Welding Bevels and Root Face

Nominal Wall Thickness, t	End Preparation
Less than x [Note]	Cut square or slightly chamfer, at manufacturer's option. (Not illustarted.)
x to 22 (0.88)	Plain bevel as in sketch (a) above.
More than 22 (0.88)	Compound bevel as in sketch (b) above.

GENERAL NOTES: Dimensions in parentheses are in inches. Others are in Millimeters.
NOTE: x = 5 (0.19) for carbon steel or ferritic alloy steel
x = 3 (0.12) for austenitic alloy steel

JIS B2311

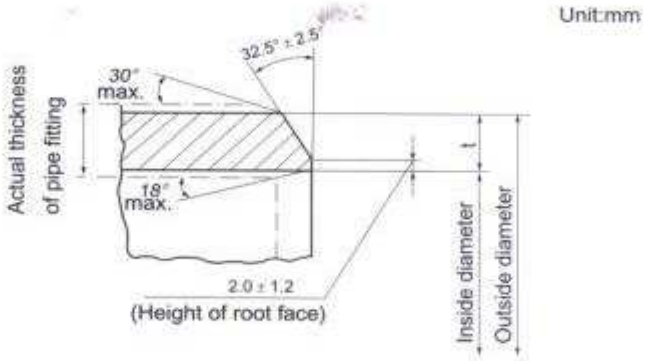

Shape and Dimensions of Bevel End

Dimensional Tolerances (ASME)

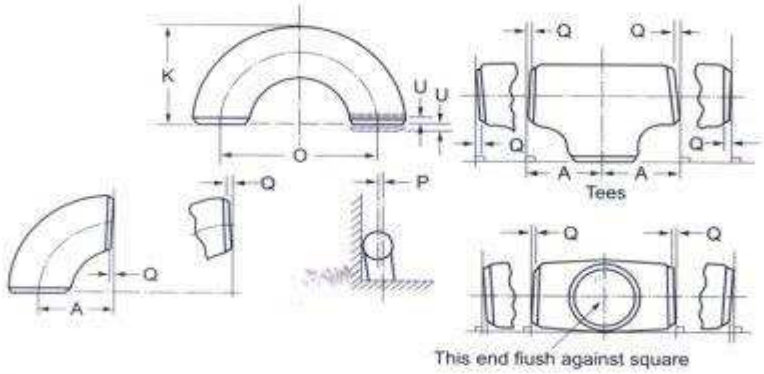

ASME B16.9, B16.28

Pipe Size	All Fittings					90 & 45 Elbows and Tees		Reducers and Lap Joint Stub ends		Caps	
	Outside Diameter at Bevel, D (1)		Inside Diameter at End (1)		Wall Thickness t	Center-to-End Dimensions A,B,C,M		Overall Length, F,H		Overall Length, E	
	IN	MM	IN	MM		IN	MM	IN	MM	IN	MM
1/2~2 1/2	+0.06 -0.03	+1.6 -0.8	± 0.03	± 0.8	Not Less Than 87.5% of Nominal Thickness	± 0.06	± 2	± 0.06	± 2	± 0.12	± 3
3~2 1/2 4	± 0.06	± 1.6	± 0.06	± 1.6							
5~8	+0.09 -0.06	+2.4 -1.6								± 0.25	± 6
10~18	+0.16 -0.12	+4.0 -3.2	± 0.12	± 3.2		± 0.09		± 0.09			
20~24 26~30 32~48	+0.25 -0.19	+6.4 -4.8	± 0.19	± 4.8		± 0.12	± 3	± 0.19	± 5	± 0.38	± 10
						± 0.19	± 5				

Pipe Size	Lap Joint Stub Ends (2)						180 Return Bends					
	Outside Diameter of Lap, G		Lap Thickness		Fillet Radius of Lap, R		Center-to-Center Dimension, O		Back-to-Face Dimension, K		Alignment of Ends, U	
	IN	MM	IN	MM	IN	MM	IN	MM	IN	MM	IN	MM
1/2~2 1/2 3-2 1/2 4 5-8	+0 -0.03	+0 -1	+0.06 -0	+1.6 -0	+0 -0.03	+0 -1	± 0.25	± 6	± 0.25	± 6	0.03	± 1
					+0 -0.06	+0 -2						
10-18 20-24	+0 -0.06	+0 -2	+0.12 -0	+3.2 -0			± 0.38	± 10			± 0.06	± 2

Pipe Size	Off Angle,Q		Off Plane, P	
	IN	MM	IN	MM
1/2 ~ 4	± 0.03	± 1	± 0.06	± 2
5 ~ 8	± 0.06	± 2	± 0.12	± 4
10 ~ 12	± 0.09		± 0.19	± 5
14 ~ 16		± 3	± 0.25	± 6
18 ~ 24	± 0.12	± 4	± 0.38	± 10
26 ~ 30	± 0.19	± 5		
32 ~ 42			± 0.50	± 13
44 ~ 48			± 0.75	± 19

NOTES:

(1) Out-of-round is the sum of absolute values of plus and minus tolerances.

(2) Outside diameter of barrel see the table on page 14.

Dimensional Tolerances (MSS)

MSS SP-43

Nominal Pipe Size	All Fittings		90 Elbows 45 Elbows Tees	Reducers Lap-Joint Stub Ends	180 Returns			Caps	Lap-Joint Stub Ends	
	Outside Diameter at Welding End(a)	Wall Thick-ness	Center-to-End A-B-C-M	Overall Length F-H	Center-to-Center O	Back-to-Face K	Align-ment of Ends U	Overall Length E	Fillet(b) Radius of Lap A	Outside Diameter of Lap G
1/2~1½	± 0.03 (± 0.8)	Not less than 87.5% ofnominal thick-ness	± 0.06 (± 1.6)		± 0.25 (± 6.4)	± 0.25 (± 6.4)	± 0.03 (± 0.8)	± 0.12 (± 3.2)	+0 -0.03 (+0) (-0.8)	+0 -0.03 (+0) (-0.8)
2~3½										
4									+0 -0.06 (+0) (-1.6)	
5~8	+0.06 -0.03 (+1.6) (-0.8)							± 0.25 (± 6.4)		
10~18	0.09 -0.03 (+2.4) (-0.8)		± 0.09 (± 2.4)		± 0.38 (± 9.6)		± 0.06 (± 1.6)			+0 -0.06 (+0) (-1.6)
20~24	+0.12 -0.03 (+3.2) (-0.8)									

GENERAL NOTE:

All dimensions are in inches. Dimensions in brachets are in millimeters for reference only.

NOTES:

(a) Out of roundness is the vector sum of plus and minus tolerance.

(b) Fillet B radius is maximum. See page 14.

Dimensional Tolerances (JIS)

JIS B2311

Item	Types of pipe fittings	Nominal diameter							
		A	15 ~ 65	80 ~ 100	125 ~ 200	250 ~ 450	500 ~ 600	650 ~ 750	800 ~ 1200
		B	1/2 ~ 2 1/2	3 ~ 4	5 ~ 8	10 ~ 18	20 ~ 24	26 ~ 30	32 ~ 48
		Tolerance							
Outside diameter at end	All types of pipe fittings	± 2.0		± 2.5	± 3.5	+5.0 -4.5	+6.4 -4.8		
Inside diameter at end face	All types of pipe fittings					± 4.5	± 4.8		
Thickness	All types of pipe fittings	+not specifie -15%							
Bevel angle	All types of pipe fittings	See figure Shape and Dimensions of Bevel End on page							
Height of root face	All types of pipe fittings	See figure Shape and Dimensions of Bevel End on page							
Dimension from center line to end face (H,F)	45 elbows, 90 elbows	± 2.0			± 3.2				± 4.8
Centerline dimension (P)	180 elbows	± 6.4			± 9.5		-		
Dimension from back to end facd (K)	180 elbows	± 6.4					-		
Alignment of end faces (U) (max.)	180 elbows	1.6			3.2		-		
Overall length (H)	Reducers	± 2.0			± 3.2			± 4.8	
Dimension from centerline to end face (C, M)	Tees	± 2.0			± 3.2				± 4.8
Dimension from back to end face (E)	Caps	± 3.2			± 6.4			-	
Outer peripheral length at end	All types of pipe fittings	-						± 0.5%	

Remarks 1 For the dimensional tolerances for H of reducer and M of reduced tee, the tolerances specified for the larger diameter side shall apply.

2 For the galvanized part of white pipe fittings, the above-mentioned tolerance shall be applicable before galvanizing.

Dimensional Tolerances (JIS)

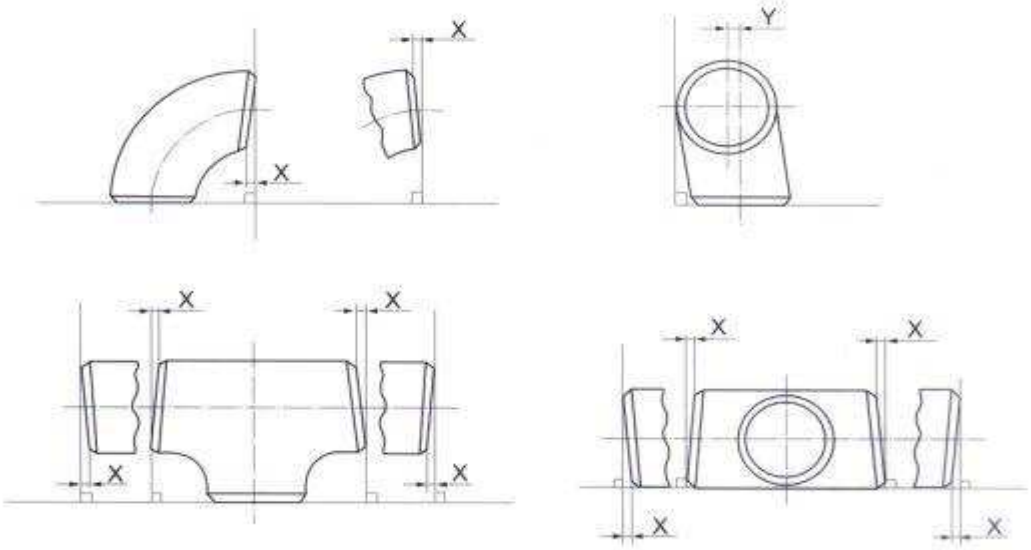

JIS B2311

Item	Types of pipe fitting	Nominal diameter								
		A	15 ~ 100	125 ~ 200	250 ~ 300	350 ~ 400	450 ~ 600	650 ~ 750	800 ~ 1050	1100 ~ 1200
		B	1/2 ~ 4	5 ~ 8	10 ~ 12	14 ~ 16	18 ~ 24	26 ~ 30	32 ~ 42	44 ~ 48
		Tolerance								
Off angle (X)	Elbows, reducers, tees	0.8	1.6	2.4		3.2	4.8			
Off plane (Y)	Elbows, tees	1.6	3.2	4.8	6.4	9.5			12.7	19.1

Remarks 1 For the tolerances on alignment of reducer and reduced tee, the tolerances specified for larger diameter side shall apply.

2 For the galvanized part of white pipe fittings, the above-mentioned tolerance shall be applied before galvanizing.

Dimensional Tolerances (DIN)

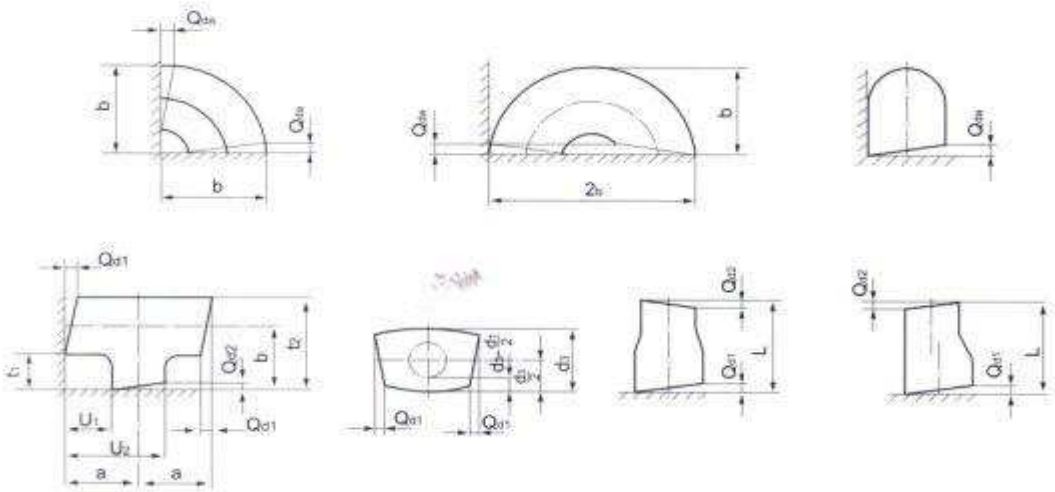

DIN 2605/2615/2616/2617/2609 EN10253-1

d a in mm	Limit Deviations for Outer Diameter		Tolerance	
		Subject to agrement	on Circularity	Q
< 100	± 1% *d a* (with a maximum of ± 0.5mm)	± 0.4mm	Within the specified tolerance on diameter	1% of dimension (with a maximum of 1mm)
100<da < 200	± 1% *d a*	± 0.5% *d a*		
>200	± 1% *d a*	± 0.6% *d a*	2%	

Nominal Size DN	Limit Deviations for Dimension					
	45 Elbow *b*	90 Elbow *b*	180 Bend *2b*	Cap *h*	Tee *a* and *b*	Reducer *l 1*
15~65a	± 6.0	± 2.5	± 8.0	± 4	± 2.0	± 2.5
80-100	± 7.0	± 3.0	± 9.0			± 3.0
125-200	± 8.5	± 3.5	± 10.0	± 7		± 3.5
250	± 9.5	± 4.0	± 14.0		± 3.0	± 4.0
300-450	± 12.0	± 5.0				± 5.0
500-600	± 14.5	± 6.0	± 16.0			± 6.0
700			To Be Agreed	± 10		
800	± 19.0	± 8.0			± 5.0	
900-1200			Agreed			± 8.0

Nominal Size DN	Thickness s	Limit Deviations for Wall Thickness s		
		DIN		EN10253-1
15-400		-12.5% +15%		-0% +20%
	s < 4mm			-12.5% +15%
450-600	s>4mm			Not Specified
700-1200	s < 10mm	-0.35mm	+15%	
	s>10mm	-0.5mm		

Approximate Weights of Buttwelding Fittings - LR 90 Elbows

NPS	DIN S3 3D	DIN S3 5D	SGP/LG	Sch5/5s	Sch10s	Sch40s	Sch80s	Sch10	Sch20	Sch30
1/2	0.04	0.07	0.08	0.06	0.06	0.08	0.10	0.06	-	0.06
3/4	0.07	0.13	0.10	0.07	0.07	0.11	0.14	0.07	-	0.07
1	0.12	0.23	0.15	0.08	0.14	0.16	0.19	0.14	-	0.14
1¼	0.19	0.37	0.26	0.12	0.19	0.25	0.35	0.19	-	0.21
1½	0.26	0.50	0.35	0.17	0.27	0.37	0.49	0.27	-	0.31
2	0.49	0.87	0.64	0.29	0.47	0.66	0.87	0.47	-	0.54
2½	0.78	1.44	1.12	0.54	0.78	1.32	1.77	0.78	-	1.22
3	1.22	2.18	1.58	0.80	1.13	2.02	2.81	1.13	-	1.75
3½	-	-	2.11	1.05	1.49	2.91	3.96	1.49	-	2.43
4	2.36	4.17	2.91	1.36	1.94	3.88	5.45	1.94	-	3.07
5	4.01	6.94	4.49	2.75	3.36	6.62	9.68	3.36	-	-
6	6.53	11.1	7.09	3.94	4.81	10.6	15.9	4.81	-	-
8	15.8	26.5	14.4	6.87	9.27	20.3	31.7	9.27	15.9	17.6
10	24.8	42.3	25.4	13.1	16.1	37.0	49.3	16.1	24.7	30.8
12	39.8	67.5	38.1	21.7	25.0	53.7	71.3	25.0	36.1	47.6
14	57.5	91.6	56.7	27.9	33.6	69.6	91.6	46.7	58.1	69.6
16	82.6	132	74.3	38.6	43.9	91.6	121	60.8	75.7	91.6
18	119	194	94.2	48.9	55.7	116	153	77.5	96.9	136
20	161	264	116	68.9	79.6	143	188	96.0	143	188
22	-	-	141	83.3	96.5	173	229	115	173	229
24	265	434	168	114	132	206	274	138	206	309
26	-	-	198	-	-	-	-	-	322	-
28	365		230	-	-	-	-	-	369	-
30	-	-	264	-	-	-	-	270	423	536
32	461	-	301	-	-	-	-	-	466	-
34	-	-	340	-	-	-	-	-	528	-
36	585		380	-	-	-	-	-	590	-
38	-	-	425	-	-	-	-	-	-	-
40	726	-	471	-	-	-	-	-	-	-
42	-	-	518	-	-	-	-	-	-	-
44	-	-	570	-	-	-	-	-	-	-
46	-	-	623	-	-	-	-	-	-	-
48	1048	-	677	-	-	-	-	-	-	-

NPS	STD	Sch40	Sch60	XS	Sch80	Sch100	Sch120	Sch140	Sch160	XXS
1/2	0.08	0.08	-	0.10	0.10	-	-	-	-	-
3/4	0.11	0.11	-	0.14	0.14	-	-	-	-	-
1	0.16	0.16	-	0.19	0.19	-	-	-	0.25	0.33
1¼	0.25	0.25	-	0.35	0.35	-	-	-	0.43	0.58
1½	0.37	0.37	-	0.49	0.49	-	-	-	0.66	0.87
2	0.66	0.66	-	0.87	0.87	-	-	-	1.32	1.67
2½	1.32	1.32	-	1.77	1.77	-	-	-	2.29	3.08
3	2.02	2.02	-	2.81	2.81	-	-	-	3.88	5.02
3½	2.91	2.91	-	3.96	3.96	-	-	-	-	7.22
4	3.88	3.88	-	5.45	5.45	-	6.87	-	8.19	9.68
5	6.62	6.62	-	9.68	9.68	-	12.3	-	15.0	17.6
6	10.6	10.6	-	15.9	15.9	-	19.4	-	24.7	29.1
8	20.3	20.3	25.6	31.7	31.7	37.0	44.0	48.4	53.7	52.9
10	37.0	37.0	49.3	49.3	58.1	69.6	81.0	94.3	105	101
12	53.7	58.1	80.1	71.3	96.9	117	137	153	175	142
14	69.6	71.3	108	91.6	136	163	182	212	240	-
16	91.6	121	157	121	198	238	278	329	357	-
18	116	172	225	153	279	337	380	438	484	-
20	143	223	302	188	380	453	532	618	678	-
22	173	-	430	229	500	-	-	-	-	-
24	206	373	518	274	647	771	877	1008	1119	-
26	242	-	-	322	-	-	-	-	-	-
28	275	-	-	369	-	-	-	-	-	-
30	324	-	-	423	-	-	-	-	-	-
32	349	634	-	466	-	-	-	-	-	-
34	396	716	-	528	-	-	-	-	-	-
36	442	877	-	590	-	-	-	-	-	-
38	495	-	-	658	-	-	-	-	-	-
40	547	-	-	729	-	-	-	-	-	-
42	603	-	-	803	-	-	-	-	-	-
44	663	-	-	885	-	-	-	-	-	-
46	726	-	-	966	-	-	-	-	-	-
48	790	-	-	1051	-	-	-	-	-	-

Approximate Weights of Buttwelding Fittings - LR 45 Elbows

NPS	DIN S3 3D	DIN S3 5D	SGP/LG	Sch5/5s	Sch10s	Sch40s	Sch80s	Sch10	Sch20	Sch30
1/2	0.02	0.04	0.04	0.03	0.03	0.04	0.05	0.03	-	0.03
2/3	0.04	0.07	0.05	0.04	0.04	0.06	0.07	0.04	-	0.04
1	0.06	0.12	0.08	0.04	0.07	0.08	0.10	0.07	-	0.07
1¼	0.10	0.19	0.13	0.06	0.10	0.13	0.18	0.10	-	0.11
1½	0.13	0.25	0.18	0.09	0.14	0.19	0.25	0.14	-	0.16
2	0.25	0.44	0.32	0.15	0.24	0.34	0.45	0.24	-	0.28
2½	0.39	0.72	0.60	0.28	0.40	0.68	0.91	0.40	-	0.63
3	0.61	1.09	0.79	0.41	0.58	1.04	1.45	0.58	-	0.90
3½	-	-	1.06	0.54	0.77	1.50	2.04	0.77	-	1.25
4	1.18	2.09	1.46	0.70	1.00	2.00	2.81	1.00	-	1.58
5	2.01	3.47	2.25	1.42	1.73	3.41	4.99	1.73	-	-
6	3.27	5.55	3.55	2.03	2.48	5.45	8.17	2.48	-	-
8	7.90	13.3	7.20	3.54	4.78	10.4	16.3	4.78	8.17	9.08
10	12.4	21.2	12.7	6.75	8.30	19.1	25.4	8.30	12.7	15.9
12	19.9	33.8	19.0	11.2	12.9	27.7	36.8	12.9	18.6	24.5
14	28.8	45.8	28.4	14.4	17.3	35.9	47.2	24.1	30.0	35.9
16	41.3	66.0	37.2	19.9	22.7	47.2	62.2	31.3	39.0	47.2
18	59.5	97.0	47.1	25.2	28.7	59.9	79.0	40.0	49.9	69.9
20	80.5	132	58.3	35.5	41.1	73.6	97.2	49.5	73.6	97.2
22	-	-	70.5	43.0	49.8	89.0	118	59.5	89.0	118
24	133	217	84.1	59.0	68.0	106	141	71.3	106	159
26	-	-	99.0	-	-	-	-	-	166	-
28	183	-	115	-	-	-	-	-	190	-
30	-	-	132	-	-	-	-	139	218	276
32	231	-	150	-	-	-	-	-	240	-
34	-	-	170	-	-	-	-	-	272	-
36	293	-	190	-	-	-	-	-	304	-
38	-	-	212	-	-	-	-	-	-	-
40	363	-	235	-	-	-	-	-	-	-
42	-	-	259	-	-	-	-	-	-	-
44	-	-	285	-	-	-	-	-	-	-
46	-	-	312	-	-	-	-	-	-	-
48	524	-	339	-	-	-	-	-	-	-

NPS	STD	Sch40	Sch60	XS	Sch80	Sch100	Sch120	Sch140	Sch160	XXS
1/2	0.04	0.04	-	0.05	0.05	-	-	-	-	-
3/4	0.06	0.06	-	0.07	0.07	-	-	-	-	-
1	0.08	0.08	-	0.10	0.10	-	-	-	0.13	0.17
1¼	0.13	0.13	-	0.18	0.18	-	-	-	0.22	0.30
1½	0.19	0.19	-	0.25	0.25	-	-	-	0.34	0.45
2	0.34	0.34	-	0.45	0.45	-	-	-	0.68	0.86
2½	0.68	0.68	-	0.91	0.91	-	-	-	1.18	1.59
3	1.04	1.04	-	1.45	1.45	-	-	-	2.00	2.59
3½	1.50	1.50	-	2.04	2.04	-	-	-	-	3.72
4	2.00	2.00	-	2.81	2.81	-	3.54	-	4.22	4.99
5	3.41	3.41	-	4.99	4.99	-	6.36	-	7.72	9.08
6	5.45	5.45	-	8.17	8.17	-	9.99	-	12.7	15.0
8	10.4	10.4	13.2	16.3	16.3	19.1	22.7	25.0	27.7	27.2
10	19.1	19.1	25.4	25.4	30.0	35.9	41.8	48.6	54.0	52.2
12	27.7	30.0	41.3	36.8	49.9	60.4	70.8	79.0	90.4	73.1
14	35.9	36.8	55.8	47.2	69.9	84.0	94.0	109	124	-
16	47.2	62.2	80.8	62.2	102	123	143	169	184	-
18	59.9	88.5	116	79.0	144	174	196	226	250	-
20	73.6	115	156	97.2	196	233	274	319	350	-
22	89.0	-	222	118	258	-	-	-	-	-
24	106	192	267	141	334	397	452	520	577	-
26	125	-	-	166	-	-	-	-	-	-
28	142	-	-	190	-	-	-	-	-	-
30	167	-	-	218	-	-	-	-	-	-
32	180	327	-	240	-	-	-	-	-	-
34	204	369	-	272	-	-	-	-	-	-
36	228	452	-	304	-	-	-	-	-	-
38	255	-	-	339	-	-	-	-	-	-
40	282	-	-	376	-	-	-	-	-	-
42	311	-	-	414	-	-	-	-	-	-
44	342	-	-	456	-	-	-	-	-	-
46	374	-	-	498	-	-	-	-	-	-
48	407	-	-	542	-	-	-	-	-	-

Approximate Weights of Buttwelding Fittings - LR 180 Returns

NPS	DIN S3 3D	DIN S3 5D	SGP/LG	Sch5/5s	Sch10s	Sch40s	Sch80s	Sch10	Sch20	Sch30
1/2	0.08	0.14	0.16	0.12	0.12	0.16	0.21	0.12	-	0.12
3/4	0.14	0.27	0.21	0.14	0.14	0.23	0.29	0.14	-	0.14
1	0.25	0.47	0.31	0.16	0.29	0.33	0.39	0.29	-	0.29
1¼	0.39	0.76	0.54	0.25	0.39	0.52	0.72	0.39	-	0.43
1½	0.54	1.03	0.72	0.35	0.56	0.76	1.01	0.56	-	0.64
2	1.01	1.79	1.32	0.60	0.97	1.36	1.79	0.97	-	1.11
2½	1.61	2.97	2.31	1.11	1.61	2.72	3.65	1.61	-	2.51
3	2.51	4.49	3.25	1.65	2.33	4.16	5.79	2.33	-	3.61
3½	-	-	4.35	2.16	3.07	5.99	8.16	3.07	-	5.01
4	4.86	8.59	5.99	2.80	4.00	7.99	11.2	4.00	-	6.32
5	8.26	14.3	9.25	5.67	6.92	13.6	19.9	6.92	-	-
6	13.5	22.9	14.6	8.12	9.91	21.8	32.7	9.91	-	-
8	32.6	54.6	29.7	14.2	19.1	41.7	65.3	19.1	32.7	36.3
10	51.1	87.1	52.3	27.0	33.2	76.2	102	33.2	50.8	63.5
12	82.0	139	78.5	44.8	51.6	111	147	51.6	74.4	98.0
14	118	189	117	57.6	69.1	143	189	96.2	120	143
16	170	272	153	79.5	90.5	189	249	125	156	189
18	245	400	194	101	115	240	316	160	200	279
20	332	544	239	142	164	294	388	198	294	388
22	-	-	290	172	199	356	472	238	356	472
24	546	894	346	236	272	425	564	285	425	637
26	-	-	408	-	-	-	-	-	663	-
28	752	-	474	-	-	-	-	-	759	-
30	-	-	544	-	-	-	-	555	871	1103
32	950	-	620	-	-	-	-	-	959	-
34		-	700	-	-	-	-	-	1087	-
36	1205	-	783	-	-	-	-	-	1215	-
38	-	-	876	-	-	-	-	-	-	-
40	1496	-	970	-	-	-	-	-	-	-
42	-	-	1067	-	-	-	-	-	-	-
44	-	-	1174	-	-	-	-	-	-	-
46	-	-	1283	-	-	-	-	-	-	-
48	2159	-	1395	-	-	-	-	-	-	-

NPS	STD	Sch40	Sch60	XS	Sch80	Sch100	Sch120	Sch140	Sch160	XXS
1/2	0.16	0.16	-	0.21	0.21	-	-	-	-	-
3/4	0.23	0.23	-	0.29	0.29	-	-	-	-	-
1	0.33	0.33	-	0.39	0.39	-	-	-	0.52	0.68
1¼	0.52	0.52	-	0.72	0.72	-	-	-	0.89	1.19
1½	0.76	0.76	-	1.01	1.01	-	-	-	1.36	1.79
2	1.36	1.36	-	1.79	1.79	-	-	-	2.72	3.44
2½	2.72	2.72	-	3.65	3.65	-	-	-	4.72	6.34
3	4.16	4.16	-	5.79	5.79	-	-	-	7.99	10.3
3½	5.99	5.99	-	8.16	8.16	-	-	-	-	14.9
4	7.99	7.99	-	11.2	11.2	-	14.2	-	16.9	19.9
5	13.6	13.6	-	19.9	19.9	-	25.4	-	30.9	36.3
6	21.8	21.8	-	32.7	32.7	-	39.9	-	50.8	59.9
8	41.7	41.7	52.6	65.3	65.3	76.2	90.7	99.8	111	109
10	76.2	76.2	102	102	120	143	167	194	216	209
12	111	120	165	147	200	241	283	316	361	292
14	143	147	223	189	279	336	376	437	495	-
16	189	249	323	249	408	490	573	677	735	-
18	240	354	463	316	575	695	782	902	998	-
20	294	459	622	388	782	933	1096	1274	1397	-
22	356	-	886	472	1030	-	-	-	-	-
24	425	767	1067	564	1334	1588	1807	2077	2304	-
26	499	-	-	663	-	-	-	-	-	-
28	567	-	-	759	-	-	-	-	-	-
30	667	-	-	871	-	-	-	-	-	-
32	719	1307	-	959	-	-	-	-	-	-
34	815	1475	-	1087	-	-	-	-	-	-
36	911	1806	-	1215	-	-	-	-	-	-
38	1019	-	-	1355	-	-	-	-	-	-
40	1127	-	-	1503	-	-	-	-	-	-
42	1243	-	-	1655	-	-	-	-	-	-
44	1367	-	-	1822	-	-	-	-	-	-
46	1495	-	-	1990	-	-	-	-	-	-
48	1627	-	-	2166	-	-	-	-	-	-

Approximate Weights of Buttwelding Fittings - SR 90 Elbows

NPS	SGP/LG	Sch5/5s	Sch10s	Sch40s	Sch80s	Sch10	Sch20	Sch30	STD
1/2	-	0.04	0.04	0.05	0.07	0.04	-	0.04	0.05
3/4	-	0.05	0.05	0.07	0.09	0.05	-	0.05	0.07
1	0.10	0.05	0.09	0.11	0.13	0.09	-	0.09	0.11
1¼	0.17	0.08	0.13	0.17	0.23	0.13	-	0.14	0.17
1½	0.24	0.11	0.18	0.25	0.33	0.18	-	0.21	0.25
2	0.43	0.19	0.31	0.44	0.58	0.31	-	0.36	0.44
2½	0.75	0.36	0.52	0.88	1.18	0.52	-	0.81	0.88
3	1.05	0.53	0.75	1.35	1.87	0.75	-	1.17	1.35
3½	1.41	0.70	0.99	1.94	2.64	0.99	-	1.62	1.94
4	1.94	0.91	1.29	2.59	3.63	1.29	-	2.05	2.59
5	2.99	1.83	2.24	4.41	6.45	2.24	-	-	4.41
6	4.73	2.63	3.21	7.05	10.6	3.21	-	-	7.05
8	9.61	4.58	6.18	13.5	21.1	6.18	10.6	11.8	13.5
10	16.9	8.73	10.7	24.7	32.9	10.7	16.4	20.6	24.7
12	25.4	14.5	16.7	35.8	47.6	16.7	24.1	31.7	35.8
14	37.8	18.6	22.4	46.4	61.1	31.1	38.8	46.4	46.4
16	49.5	25.7	29.3	61.1	80.5	40.5	50.5	61.1	61.1
18	62.8	32.6	37.1	77.5	102	51.7	64.6	90.4	77.5
20	77.7	45.9	53.1	95.1	126	64.0	95.1	126	95.1
22	94.1	55.6	64.4	115	153	76.9	115	153	115
24	112	76.3	88.0	137	183	92.2	137	206	137
26	132	-	-	-	-	-	215	-	161
28	154	-	-	-	-	-	246	-	184
30	176	-	-	-	-	180	282	357	216
32	201	-	-	-	-	-	310	-	233
34	227	-	-	-	-	-	352	-	264
36	253	-	-	-	-	-	393	-	295
38	283	-	-	-	-	-	-	-	330
40	314	-	-	-	-	-	-	-	365
42	346	-	-	-	-	-	-	-	402
44	380	-	-	-	-	-	-	-	442
46	415	-	-	-	-	-	-	-	484
48	452	-	-	-	-	-	-	-	526

NPS	Sch40	Sch60	XS	Sch80	Sch100	Sch120	Sch140	Sch160	XXS
1/2	0.05	-	0.07	0.07	-	-	-	-	-
3/4	0.07	-	0.09	0.09	-	-	-	-	-
1	0.11	-	0.13	0.13	-	-	-	0.17	0.22
1¼	0.17	-	0.23	0.23	-	-	-	0.29	0.39
1½	0.25	-	0.33	0.33	-	-	-	0.44	0.58
2	0.44	-	0.58	0.58	-	-	-	0.88	1.11
2½	0.88	-	1.18	1.18	-	-	-	1.53	2.05
3	1.35	-	1.87	1.87	-	-	-	2.59	3.35
3½	1.94	-	2.64	2.64	-	-	-	-	4.81
4	2.59	-	3.63	3.63	-	4.58	-	5.46	6.45
5	4.41	-	6.45	6.45	-	8.23	-	9.99	11.8
6	7.05	-	10.6	10.6	-	12.9	-	16.4	19.4
8	13.5	17.0	21.1	21.1	24.7	29.4	32.3	35.8	35.2
10	24.7	32.9	32.9	38.8	46.4	54.0	62.8	69.9	67.5
12	38.8	53.4	47.6	64.6	78.1	91.6	102	117	94.5
14	47.6	72.2	61.1	90.4	109	122	142	160	-
16	80.5	105	80.5	132	159	186	219	238	-
18	115	150	102	186	225	253	292	323	-
20	149	201	126	253	302	355	412	452	-
22	-	287	153	333	-	-	-	-	-
24	248	345	183	432	514	585	672	746	-
26	-	-	215	-	-	-	-	-	-
28	-	-	246	-	-	-	-	-	-
30	-	-	282	-	-	-	-	-	-
32	423	-	310	-	-	-	-	-	-
34	477	-	352	-	-	-	-	-	-
36	585	-	393	-	-	-	-	-	-
38	-	-	438	-	-	-	-	-	-
40	-	-	486	-	-	-	-	-	-
42	-	-	535	-	-	-	-	-	-
44	-	-	590	-	-	-	-	-	-
46	-	-	644	-	-	-	-	-	-
48	-	-	701	-	-	-	-	-	-

Approximate Weights of Buttwelding Fittings - SR 45 Elbows

NPS	SGP/LG	Sch5/5s	Sch10s	Sch40s	Sch80s	Sch10	Sch20	Sch30	STD
1/2	-	0.02	0.02	0.03	0.03	0.02	-	0.02	0.03
3/4	-	0.03	0.03	0.04	0.05	0.03	-	0.03	0.04
1	0.05	0.03	0.05	0.05	0.07	0.05	-	0.05	0.05
1¼	0.09	0.04	0.07	0.09	0.12	0.07	-	0.07	0.09
1½	0.12	0.06	0.09	0.13	0.17	0.09	-	0.11	0.13
2	0.22	0.10	0.16	0.23	0.30	0.16	-	0.19	0.23
2½	0.38	0.19	0.27	0.45	0.61	0.27	-	0.42	0.45
3	0.53	0.27	0.39	0.69	0.97	0.39	-	0.60	0.69
3½	0.71	0.36	0.51	1.00	1.36	0.51	-	0.83	1.00
4	0.97	0.47	0.67	1.33	1.87	0.67	-	1.05	1.33
5	1.50	0.95	1.15	2.27	3.33	1.15	-	-	2.27
6	2.37	1.35	1.65	3.63	5.45	1.65	-	-	3.63
8	4.81	2.36	3.19	6.96	10.9	3.19	5.45	6.05	6.96
10	8.45	4.50	5.53	12.7	17.0	5.53	8.47	10.6	12.7
12	12.7	7.47	8.60	18.5	24.5	8.60	12.4	16.4	18.5
14	18.9	9.60	11.5	23.9	31.5	16.0	20.0	23.9	23.9
16	24.8	13.3	15.1	31.5	41.5	20.9	26.0	31.5	31.5
18	31.4	16.8	19.1	40.0	52.7	26.6	33.3	46.6	40.0
20	38.9	23.7	27.4	49.0	64.8	33.0	49.0	64.8	49.0
22	47.1	28.6	33.2	59.3	78.7	39.7	59.3	78.7	59.3
24	56.0	39.3	45.3	70.8	94.1	47.5	70.8	106	71
26	66.0	-	-	-	-	-	111	-	83
28	77.0	-	-	-	-	-	127	-	95
30	88.0	-	-	-	-	92.6	145	184	111
32	101	-	-	-	-	-	160	-	120
34	114	-	-	-	-	-	181	-	136
36	127	-	-	-	-	-	203	-	152
38	142	-	-	-	-	-	-	-	170
40	157	-	-	-	-	-	-	-	188
42	173	-	-	-	-	-	-	-	207
44	190	-	-	-	-	-	-	-	228
46	208	-	-	-	-	-	-	-	249
48	226	-	-	-	-	-	-	-	271

NPS	Sch40	Sch60	XS	Sch80	Sch100	Sch120	Sch140	Sch160	XXS
1/2	0.03	-	0.03	0.03	-	-	-	-	-
3/4	0.04	-	0.05	0.05	-	-	-	-	-
1	0.05	-	0.07	0.07	-	-	-	0.09	0.11
1¼	0.09	-	0.12	0.12	-	-	-	0.15	0.20
1½	0.13	-	0.17	0.17	-	-	-	0.23	0.30
2	0.23	-	0.30	0.30	-	-	-	0.45	0.57
2½	0.45	-	0.61	0.61	-	-	-	0.79	1.06
3	0.69	-	0.97	0.97	-	-	-	1.33	1.73
3½	1.00	-	1.36	1.36	-	-	-	-	2.48
4	1.33	-	1.87	1.87	-	2.36	-	2.81	3.33
5	2.27	-	3.33	3.33	-	4.24	-	5.15	6.05
6	3.63	-	5.45	5.45	-	6.66	-	8.47	10.0
8	6.96	8.78	10.9	10.9	12.7	15.1	16.7	18.5	18.2
10	12.7	17.0	17.0	20.0	23.9	27.9	32.4	36.0	34.8
12	20.0	27.5	24.5	33.3	40.3	47.2	52.7	60.2	48.7
14	24.5	37.2	31.5	46.6	56.0	62.7	72.9	82.6	-
16	41.5	53.9	41.5	68.1	81.7	95.6	113	123	-
18	59.0	77.2	52.7	96.0	116	130	150	166	-
20	76.6	104	64.8	130	156	183	212	233	-
22	-	148	78.7	172	-	-	-	-	-
24	128	178	94.1	222	265	301	347	384	-
26	-	-	111	-	-	-	-	-	-
28	-	-	127	-	-	-	-	-	-
30	-	-	145	-	-	-	-	-	-
32	218	-	160	-	-	-	-	-	-
34	246	-	181	-	-	-	-	-	-
36	301	-	203	-	-	-	-	-	-
38	-	-	226	-	-	-	-	-	-
40	-	-	251	-	-	-	-	-	-
42	-	-	276	-	-	-	-	-	-
44	-	-	304	-	-	-	-	-	-
46	-	-	332	-	-	-	-	-	-
48	-	-	361	-	-	-	-	-	-

Approximate Weights of Buttwelding Fittings - SR 180 Returns

NPS	SGP/LG	Sch5/5s	Sch10s	Sch40s	Sch80s	Sch10	Sch20	Sch30	STD
1/2	-	0.08	0.08	0.11	0.14	0.08	-	0.08	0.11
3/4	-	0.09	0.09	0.15	0.19	0.09	-	0.09	0.15
1	0.21	0.11	0.19	0.22	0.26	0.19	-	0.19	0.22
1¼	0.35	0.17	0.26	0.35	0.48	0.26	-	0.29	0.35
1½	0.49	0.23	0.37	0.51	0.67	0.37	-	0.43	0.51
2	0.89	0.40	0.65	0.91	1.19	0.65	-	0.74	0.91
2½	1.55	0.74	1.07	1.81	2.43	1.07	-	1.67	1.81
3	2.16	1.10	1.55	2.77	3.86	1.55	-	2.41	2.77
3½	2.90	1.44	2.05	3.99	5.44	2.05	-	3.34	3.99
4	4.00	1.87	2.67	5.33	7.49	2.67	-	4.21	5.33
5	6.16	3.78	4.61	9.09	13.3	4.61	-	-	9.09
6	9.74	5.41	6.61	14.5	21.8	6.61	-	-	14.5
8	19.8	9.43	12.7	27.8	43.5	12.7	21.8	24.2	27.8
10	34.8	18.0	22.1	50.8	67.7	22.1	33.9	42.3	50.8
12	52.3	29.8	34.4	73.8	98.0	34.4	49.6	65.3	73.8
14	77.9	38.4	46.1	95.6	126	64.1	79.8	95.6	95.6
16	102	53.0	60.4	126	166	83.5	104	126	126
18	129	67.1	76.5	160	210	106	133	186	160
20	160	94.6	109	196	259	132	196	259	196
22	194	114	133	237	314	158	237	314	237
24	231	157	181	283	376	190	283	425	283
26	272	-	-	-	-	-	442	-	333
28	317	-	-	-	-	-	506	-	378
30	363	-	-	-	-	370	581	735	445
32	414	-	-	-	-	-	639	-	480
34	468	-	-	-	-	-	725	-	544
36	521	-	-	-	-	-	810	-	607
38	583	-	-	-	-	-	-	-	679
40	647	-	-	-	-	-	-	-	751
42	713	-	-	-	-	-	-	-	829
44	783	-	-	-	-	-	-	-	911
46	855	-	-	-	-	-	-	-	996
48	931	-	-	-	-	-	-	-	1084

NPS	Sch40	Sch60	XS	Sch80	Sch100	Sch120	Sch140	Sch160	XXS
1/2	0.11	-	0.14	0.14	-	-	-	-	-
3/4	0.15	-	0.19	0.19	-	-	-	-	-
1	0.22	-	0.26	0.26	-	-	-	0.35	0.45
1¼	0.35	-	0.48	0.48	-	-	-	0.59	0.79
1½	0.51	-	0.67	0.67	-	-	-	0.91	1.19
2	0.91	-	1.19	1.19	-	-	-	1.81	2.29
2½	1.81	-	2.43	2.43	-	-	-	3.15	4.23
3	2.77	-	3.86	3.86	-	-	-	5.33	6.89
3½	3.99	-	5.44	5.44	-	-	-	-	9.91
4	5.33	-	7.49	7.49	-	9.43	-	11.3	13.3
5	9.09	-	13.3	13.3	-	17.0	-	20.6	24.2
6	14.5	-	21.8	21.8	-	26.6	-	33.9	39.9
8	27.8	35.1	43.5	43.5	50.8	60.5	66.5	73.8	72.6
10	50.8	67.7	67.7	79.8	95.6	111	129	144	139
12	79.8	110	98.0	133	161	189	210	241	195
14	98.0	149	126	186	224	250	292	330	-
16	166	215	166	272	327	382	451	490	-
18	236	308	210	383	463	521	601	665	-
20	306	415	259	521	622	731	849	931	-
22	-	591	314	687	-	-	-	-	-
24	512	711	376	889	1058	1205	1385	1536	-
26	-	-	442	-	-	-	-	-	-
28	-	-	506	-	-	-	-	-	-
30	-	-	581	-	-	-	-	-	-
32	871	-	639	-	-	-	-	-	-
34	983	-	725	-	-	-	-	-	-
36	1204	-	810	-	-	-	-	-	-
38	-	-	903	-	-	-	-	-	-
40	-	-	1002	-	-	-	-	-	-
42	-	-	1103	-	-	-	-	-	-
44	-	-	1215	-	-	-	-	-	-
46	-	-	1327	-	-	-	-	-	-
48	-	-	1444	-	-	-	-	-	-

Approximate Weights of Buttwelding Fittings - Straight Tees

NPS	DIN S3	SGP/LG	Sch5s	Sch10s	Sch40s	Sch80s	Sch5	Sch10	Sch20	Sch30
1/2	0.09	0.09	0.11	0.13	0.16	0.22	0.11	0.13	-	0.14
3/4	0.15	0.13	0.13	0.16	0.20	0.27	0.13	0.16	-	0.17
1	0.29	0.24	0.18	0.31	0.34	0.46	0.18	0.31	-	0.29
1¼	0.42	0.42	0.30	0.51	0.59	0.80	0.30	0.51	-	0.49
1½	0.60	0.58	0.45	0.76	0.91	1.26	0.45	0.76	-	0.78
2	0.83	0.86	0.73	1.24	1.59	2.26	0.73	1.24	-	1.29
2½	1.25	1.42	1.22	1.77	2.72	3.70	1.22	1.77	-	2.53
3	1.85	1.87	1.34	1.94	3.18	4.42	1.34	1.94	-	2.77
3½	-	2.37	1.64	2.37	4.09	5.77	1.64	2.37	-	3.39
4	3.10	3.13	2.13	3.05	5.45	7.74	2.13	3.05	-	4.31
5	4.80	4.53	4.48	5.43	9.53	13.8	4.48	5.43	-	-
6	7.00	6.84	6.64	8.18	15.4	23.8	6.64	8.18	-	-
8	14.9	12.8	9.24	12.7	25.0	38.7	9.24	12.7	21.2	23.7
10	22.0	21.8	15.4	19.3	38.6	52.9	15.4	19.3	28.9	35.9
12	35.0	32.0	25.1	28.9	54.5	72.5	25.1	28.9	39.8	52.8
14	60.0	44.7	34.5	41.2	74.9	99.6	34.5	54.7	68.2	74.9
16	82.0	55.2	42.5	48.7	88.5	117.7	42.5	64.6	80.6	88.5
18	131	70.0	54.3	62.2	113	150	54.3	83.0	103	132
20	160	86.6	85.4	99.4	155	207	85.4	113	155	207
22	-	106	103	120	188	250	103	137	188	250
24	242	116	153	175	240	319	153	175	240	360
26	-	147	-	-	-	-	-	290	465	-
28	394	165	-	-	-	-	-	330	529	665
30	-	190	351	438	481	640	351	399	640	804
32	517	217	-	-	-	-	-	434	695	873
34	-	246	-	-	-	-	-	491	786	987
36	670	276	-	-	-	-	-	561	900	1130
38	-	308	-	-	-	-	-	-	-	-
40	1018	342	-	-	-	-	-	-	-	-
42	-	352	-	-	-	-	-	-	-	-
44	-	396	-	-	-	-	-	-	-	-
46	-	434	-	-	-	-	-	-	-	-
48	1445	474	-	-	-	-	-	-	-	-

NPS	STD	Sch40	Sch60	XS	Sch80	Sch100	Sch120	Sch140	Sch160	XXS
1/2	0.16	0.16	-	0.22	0.22	-	-	-	0.28	0.40
3/4	0.20	0.20	-	0.27	0.27	-	-	-	0.39	0.51
1	0.34	0.34	-	0.46	0.46	-	-	-	0.64	0.85
1¼	0.59	0.59	-	0.80	0.80	-	-	-	1.05	1.49
1½	0.91	0.91	-	1.26	1.26	-	-	-	1.77	2.34
2	1.59	1.59	-	2.26	2.26	-	-	-	3.31	4.18
2½	2.72	2.72	-	3.70	3.70	-	-	-	5.03	6.88
3	3.18	3.18	-	4.42	4.42	-	-	-	6.01	8.20
3½	4.09	4.09	-	5.77	5.77	-	-	-	-	-
4	5.45	5.45	-	7.74	7.74	-	10.1	-	11.3	14.4
5	9.53	9.53	-	13.8	13.8	-	18.5	-	21.4	25.7
6	15.4	15.4	-	23.8	23.8	-	28.9	-	36.9	44.3
8	25.0	25.0	31.5	38.7	38.7	45.9	51.9	58.4	65.4	63.2
10	38.6	38.6	52.9	52.9	62.9	76.0	83.0	98.4	107	98.4
12	54.5	58.8	81.7	72.5	99.7	114	135	147	172	135
14	74.9	87.6	118	99.6	139	175	203	225	252	-
16	88.5	118	155	118	185	227	259	305	338	-
18	113	170	210	150	263	313	373	424	483	-
20	155	245	312	207	397	477	559	652	733	-
22	188	-	408	250	524	620	733	846	959	-
24	240	439	575	319	724	880	1043	1187	1347	-
26	350	-	-	465	-	-	-	-	-	-
28	398	-	-	529	-	-	-	-	-	-
30	481	-	-	640	-	-	-	-	-	-
32	523	956	-	695	-	-	-	-	-	-
34	591	1082	-	786	-	-	-	-	-	-
36	676	1353	-	900	-	-	-	-	-	-
38	926	-	-	1232	-	-	-	-	-	-
40	1028	-	-	1367	-	-	-	-	-	-
42	1317	-	-	1752	-	-	-	-	-	-
44	1357	-	-	1805	-	-	-	-	-	-
46	1410	-	-	1875	-	-	-	-	-	-
48	1460	-	-	1942	-	-	-	-	-	-

Approximate Weights of Buttwelding Fittings - Caps

NPS	DIN S3	SGP/LG	Sch5s	Sch10s	Sch40s	Sch80s	Sch5	Sch10	Sch20	Sch30
1/2	0.06	0.03	0.02	0.03	0.03	0.05	0.02	0.03	-	0.03
3/4	0.07	0.04	0.03	0.04	0.06	0.09	0.03	0.04	-	0.05
1	0.09	0.08	0.05	0.09	0.10	0.13	0.05	0.09	-	0.09
1¼	0.11	0.11	0.07	0.11	0.14	0.18	0.07	0.11	-	0.12
1½	0.20	0.15	0.08	0.13	0.17	0.22	0.08	0.13	-	0.15
2	0.28	0.23	0.10	0.17	0.23	0.31	0.10	0.17	-	0.19
2½	0.34	0.34	0.16	0.23	0.37	0.45	0.16	0.23	-	0.34
3	0.53	0.51	0.25	0.37	0.64	0.86	0.25	0.37	-	0.56
3½	-	0.70	0.34	0.56	0.95	1.32	0.34	0.56	-	0.79
4	1.00	0.88	0.41	0.59	1.14	1.59	0.41	0.59	-	0.90
5	1.14	1.29	0.81	0.99	1.91	2.63	0.81	0.99	-	-
6	2.65	1.99	1.13	1.39	2.91	4.27	1.13	1.39	-	-
8	5.55	3.61	1.76	2.38	4.99	7.72	1.76	2.38	4.09	4.54
10	8.00	6.33	3.35	4.13	9.08	11.8	3.35	4.13	6.36	7.72
12	9.90	9.43	5.54	6.39	13.2	17.3	5.54	6.39	9.08	11.8
14	13.5	13.2	6.62	7.99	15.9	20.4	6.62	10.7	13.2	15.9
16	18.2	16.6	8.82	10.1	20.4	26.3	8.82	13.5	16.8	20.4
18	26.0	21.2	11.3	12.9	25.9	33.6	11.3	17.2	21.8	30.4
20	38.0	26.4	16.0	18.5	32.2	42.7	16.0	21.5	32.2	42.7
22	-	31.5	19.5	22.6	37.7	49.9	19.5	26.3		
24	59.0	36.6	26.2	30.1	46.3	59.5	26.2	30.1	46.3	66.7
26	-	41.0	-	-	-	-	-	-	66.3	-
28	74.5	45.5	-	-	-	-	-	-	75.0	-
30	-	50.3	-	-	-	-	-	-	84.4	99.0
32	90.7	55.4	-	-	-	-	-	-	91.2	-
34	-	62.3	-	-	-	-	-	-	100	-
36	108	68.0	-	-	-	-	-	-	109	-
38	-	79.0	-	-	-	-	-	-	-	-
40	136	95.0	-	-	-	-	-	-	-	-
42	-	92.0	-	-	-	-	-	-	-	-
44	-	103	-	-	-	-	-	-	-	-
46	-	111	-	-	-	-	-	-	-	-
48	190	118	-	-	-	-	-	-	-	-

NPS	STD	Sch40	Sch60	XS	Sch80	Sch100	Sch120	Sch140	Sch160	XXS
1/2	0.03	0.03	-	0.05	0.05	-	-	-	-	-
3/4	0.06	0.06	-	0.09	0.09	-	-	-	-	-
1	0.10	0.10	-	0.13	0.13	-	-	-	0.16	0.20
1¼	0.14	0.14	-	0.18	0.18	-	-	-	0.22	0.29
1½	0.17	0.17	-	0.22	0.22	-	-	-	0.29	0.36
2	0.23	0.23	-	0.31	0.31	-	-	-	0.50	0.59
2½	0.37	0.37	-	0.45	0.45	-	-	-	0.82	1.00
3	0.64	0.64	-	0.86	0.86	-	-	-	1.41	1.77
3½	0.95	0.95	-	1.32	1.32	-	-	-	-	2.63
4	1.14	1.14	-	1.59	1.59	-	2.32	-	2.72	3.18
5	1.91	1.91	-	2.63	2.63	-	3.90	-	4.54	5.45
6	2.91	2.91	-	4.27	4.27	-	5.90	-	7.26	8.63
8	4.99	4.99	6.36	7.72	7.72	10.9	12.7	14.1	15.4	15.0
10	9.08	9.08	11.8	11.8	16.3	20.0	22.3	25.9	28.6	-
12	13.2	14.5	22.3	17.3	26.8	32.2	36.8	40.9	45.4	-
14	15.9	18.6	27.7	20.4	34.5	38.6	49.9	54.5	59.0	-
16	20.4	26.3	38.1	26.3	47.7	54.5	63.6	74.9	81.7	-
18	25.9	41.8	54.9	33.6	67.7	90.8	104	109	116	-
20	32.2	54.9	73.6	42.7	91.3	125	136	159	191	-
22	37.7	-	-	49.9	-	-	-	-	-	-
24	46.3	93.1	128	59.5	155	166	195	216	241	-
26	49.9	-	-	66.3	-	-	-	-	-	-
28	56.2	-	-	75.0	-	-	-	-	-	-
30	62.2	-	-	84.4	-	-	-	-	-	-
32	68.4	-	-	91.2	-	-	-	-	-	-
34	75.0	-	-	100	-	-	-	-	-	-
36	82.0	-	-	109	-	-	-	-	-	-
38	95.0	-	-	126	-	-	-	-	-	-
40	102	-	-	137	-	-	-	-	-	-
42	110	-	-	147	-	-	-	-	-	-
44	126	-	-	167	-	-	-	-	-	-
46	134	-	-	179	-	-	-	-	-	-
48	143	-	-	191	-	-	-	-	-	-

Approximate Weights of Buttwelding Fittings - Lap Joint Stub Ends

NPS	JIS				ASME Long							
	S5s	S10s	S20s	S40s	S5s	S10s	S40s	S80s	STD	S40	XS	S80
1/2	0.04	0.05	0.07	0.07	0.08	0.11	0.14	0.15	0.14	0.14	0.15	0.15
3/4	0.05	0.07	0.08	0.09	0.10	0.13	0.18	0.20	0.18	0.18	0.20	0.20
1	0.10	0.17	0.18	0.20	0.15	0.25	0.30	0.39	0.30	0.30	0.39	0.39
1¼	0.13	0.21	0.23	0.27	0.19	0.32	0.41	0.54	0.41	0.41	0.54	0.54
1½	0.14	0.24	0.25	0.31	0.24	0.41	0.54	0.68	0.54	0.54	0.68	0.68
2	0.18	0.30	0.38	0.42	0.42	0.71	1.00	1.36	1.00	1.00	1.36	1.36
2½	0.30	0.43	0.49	0.73	0.65	0.94	1.59	2.09	1.59	1.59	2.09	2.09
3	0.34	0.48	0.64	0.87	0.82	1.18	2.13	2.86	2.13	2.13	2.86	2.86
3½	-	-	-	-	0.92	1.33	2.50	3.00	2.50	2.50	3.00	3.00
4	0.43	0.61	0.81	1.21	1.11	1.61	3.18	4.22	3.18	3.18	4.22	4.22
5	0.72	0.87	1.28	1.68	2.30	2.83	5.45	7.72	5.45	5.45	7.72	7.72
6	0.88	1.07	1.57	2.21	2.65	3.26	6.81	10.4	6.81	6.81	10.4	10.4
8	1.36	1.94	3.12	3.92	3.54	4.80	10.4	15.9	10.4	10.4	15.9	15.9
10	2.15	2.53	4.08	5.80	6.66	8.21	18.2	24.5	18.2	18.2	24.5	28.6
12	2.89	3.25	4.67	7.34	9.25	10.7	22.3	30.0	22.3	23.6	30.0	39.5
14	-	-	-	-	-	-	29.1	40.4	29.1	33.1	40.4	55.8
16	-	-	-	-	-	-	32.7	43.6	32.7	44.0	43.6	73.1
18	-	-	-	-	-	-	38.6	50.9	38.6	57.2	50.9	93.1
20	-	-	-	-	-	-	42.7	56.8	42.7	66.7	56.8	114
22	-	-	-	-	-	-	47.7	63.1	47.7	-	63.1	141
24	-	-	-	-	-	-	51.3	68.6	51.3	93.1	68.6	163

NPS	ASME Short & MSS								JPI			
	S5s	S10s	S40s	S80s	STD	S40	XS	S80	S5s	S10s	S20s	S40s
1/2	0.07	0.09	0.12	0.13	0.12	0.12	0.13	0.13	0.04	0.06	0.06	0.07
3/4	0.08	0.11	0.15	0.17	0.15	0.15	0.17	0.17	0.06	0.08	0.09	0.10
1	0.10	0.16	0.19	0.25	0.19	0.19	0.25	0.25	0.08	0.13	0.14	0.16
1¼	0.12	0.20	0.26	0.34	0.26	0.26	0.34	0.34	0.10	0.17	0.19	0.22
1½	0.17	0.29	0.38	0.48	0.38	0.38	0.48	0.48	0.12	0.21	0.23	0.27
2	0.23	0.38	0.54	0.73	0.54	0.54	0.73	0.73	0.20	0.33	0.43	0.47
2½	0.33	0.47	0.80	1.05	0.80	0.80	1.05	1.05	0.31	0.44	0.53	0.74
3	0.44	0.63	1.13	1.52	1.13	1.13	1.52	1.52	0.40	0.57	0.76	1.01
3½	0.54	0.79	1.48	1.78	1.48	1.48	1.78	1.78	-	-	-	-
4	0.63	0.92	1.81	2.40	1.81	1.81	2.40	2.40	0.60	0.87	1.12	1.68
5	1.07	1.32	2.54	3.60	2.54	2.54	3.60	3.60	0.98	1.21	1.73	2.28
6	1.45	1.78	3.72	5.70	3.72	3.72	5.70	5.70	1.34	1.64	2.41	3.37
8	2.00	2.71	5.89	8.96	5.89	5.89	8.96	8.96	1.95	2.78	4.47	5.61
10	3.82	4.71	10.4	14.1	10.4	10.4	14.1	16.4	3.51	4.13	6.65	9.45
12	6.22	7.17	15.0	20.1	15.0	15.9	20.1	26.5	5.81	6.52	9.38	14.7
14	-	-	15.5	21.5	15.5	17.6	21.5	29.7	-	-	-	-
16	-	-	18.0	24.0	18.0	24.2	24.0	40.2	-	-	-	-
18	-	-	21.0	27.7	21.0	31.1	27.7	50.6	-	-	-	-
20	-	-	23.3	31.0	23.3	36.4	31.0	62.2	-	-	-	-
22	-	-	25.0	33.0	25.0	-	33.0	73.7	-	-	-	-
24	-	-	28.4	38.0	28.4	51.5	38.0	90.3	-	-	-	-

Approximate Weights of Buttwelding Fittings - Reducing Tees

NPS	DIN S3	SGP	Sch5s	Sch10s	Sch40s	Sch80s	Sch5	Sch10	Sch20	Sch30
3/4 × 1/2	0.13	0.12	0.14	0.19	0.23	0.31	0.14	0.19	-	0.19
1 × 3/4	0.26	0.23	0.23	0.38	0.42	0.57	0.23	0.38	-	0.36
1 × 1/2	0.25	0.22	0.22	0.36	0.40	0.54	0.22	0.36	-	0.34
1 1/4 × 1	0.41	0.39	0.35	0.58	0.68	0.92	0.35	0.58	-	0.56
1 1/4 × 3/4	0.40	0.37	0.35	0.58	0.68	0.92	0.35	0.58	-	0.56
1 1/4 × 1/2	0.39	0.36	0.35	0.58	0.68	0.92	0.35	0.58	-	0.56
1 1/2 × 1 1/4	0.58	0.56	0.50	0.85	1.02	1.41	0.50	0.85	-	0.88
1 1/2 × 1	0.57	0.53	0.49	0.82	0.99	1.37	0.49	0.82	-	0.85
1 1/2 × 3/4	0.55	0.51	0.48	0.81	0.97	1.34	0.48	0.81	-	0.83
1 1/2 × 1/2	-	0.49	0.45	0.76	0.91	1.26	0.45	0.76	-	0.78
2 × 1 1/2	0.79	0.80	0.78	1.33	1.70	2.41	0.78	1.33	-	1.38
2 × 1 1/4	0.76	0.77	0.75	1.27	1.63	2.31	0.75	1.27	-	1.32
2 × 1	0.72	0.73	0.73	1.24	1.59	2.26	0.73	1.24	-	1.29
2 × 3/4	0.71	0.70	0.68	1.15	1.48	2.10	0.68	1.15	-	1.20
2 × 1/2	-	0.69	0.64	1.09	1.40	1.99	0.64	1.09	-	1.13
2 1/2 × 2	1.20	1.31	1.22	1.77	2.72	3.70	1.22	1.77	-	2.53
2 1/2 × 1 1/2	1.16	1.25	1.13	1.63	2.50	3.40	1.13	1.63	-	2.33
2 1/2 × 1 1/4	1.12	1.22	1.07	1.55	2.38	3.24	1.07	1.55	-	2.21
2 1/2 × 1	1.10	1.18	1.02	1.48	2.27	3.09	1.02	1.48	-	2.11
2 1/2 × 3/4	-	1.16	0.99	1.43	2.20	2.99	0.99	1.43	-	2.05
2 1/2 × 1/2	-	1.15	0.96	1.38	2.13	2.90	0.96	1.38	-	1.98
3 × 2 1/2	1.83	1.79	1.29	1.87	3.06	4.25	1.29	1.87	-	2.66
3 × 2	1.80	1.68	1.24	1.80	2.95	4.10	1.24	1.80	-	2.57
3 × 1 1/2	1.70	1.62	1.19	1.73	2.84	3.95	1.19	1.73	-	2.47
3 × 1 1/4	1.68	1.60	1.17	1.70	2.79	3.88	1.17	1.70	-	2.43
3 × 1	-	1.56	1.16	1.68	2.75	3.82	1.16	1.68	-	2.39
3 × 3/4	-	1.52	1.14	1.65	2.71	3.77	1.14	1.65	-	2.36
3 × 1/2	-	1.50	1.12	1.63	2.67	3.71	1.12	1.63	-	2.32
3 1/2 × 3	-	2.29	1.60	2.32	4.00	5.64	1.60	2.32	-	3.32

NPS	STD	Sch40	Sch80	XS	Sch80	Sch100	Sch120	Sch140	Sch160	XXS
3/4 × 1/2	0.23	0.23	-	0.31	0.31	-	-	-	0.45	0.58
1 × 3/4	0.42	0.42	-	0.57	0.57	-	-	-	0.79	1.05
1 × 1/2	0.40	0.40	-	0.54	0.54	-	-	-	0.75	1.00
1 1/4 × 1	0.68	0.68	-	0.92	0.92	-	-	-	1.21	1.72
1 1/4 × 3/4	0.68	0.68	-	0.92	0.92	-	-	-	1.21	1.72
1 1/4 × 1/2	0.68	0.68	-	0.92	0.92	-	-	-	1.21	1.72
1 1/2 × 1 1/4	1.02	1.02	-	1.41	1.41	-	-	-	1.98	2.62
1 1/2 × 1	0.99	0.99	-	1.37	1.37	-	-	-	1.92	2.54
1 1/2 × 3/4	0.97	0.97	-	1.34	1.34	-	-	-	1.88	2.49
1 1/2 × 1/2	0.91	0.91	-	1.26	1.26	-	-	-	1.77	2.34
2 × 1 1/2	1.70	1.70	-	2.41	2.41	-	-	-	3.54	4.47
2 × 1 1/4	1.63	1.63	-	2.31	2.31	-	-	-	3.39	4.29
2 × 1	1.59	1.59	-	2.26	2.26	-	-	-	3.31	4.18
2 × 3/4	1.48	1.48	-	2.10	2.10	-	-	-	3.08	3.89
2 × 1/2	1.40	1.40	-	1.99	1.99	-	-	-	2.91	3.68
2 1/2 × 2	2.72	2.72	-	3.70	3.70	-	-	-	5.03	6.88
2 1/2 × 1 1/2	2.50	2.50	-	3.40	3.40	-	-	-	4.63	6.33
2 1/2 × 1 1/4	2.38	2.38	-	3.24	3.24	-	-	-	4.40	6.02
2 1/2 × 1	2.27	2.27	-	3.09	3.09	-	-	-	4.20	5.74
2 1/2 × 3/4	2.20	2.20	-	2.99	2.99	-	-	-	4.07	5.57
2 1/2 × 1/2	2.13	2.13	-	2.90	2.90	-	-	-	3.94	5.39
3 × 2 1/2	3.06	3.06	-	4.25	4.25	-	-	-	5.78	7.89
3 × 2	2.95	2.95	-	4.10	4.10	-	-	-	5.58	7.61
3 × 1 1/2	2.84	2.84	-	3.95	3.95	-	-	-	5.37	7.33
3 × 1 1/4	2.79	2.79	-	3.88	3.88	-	-	-	5.27	7.20
3 × 1	2.75	2.75	-	3.82	3.82	-	-	-	5.20	7.10
3 × 3/4	2.71	2.71	-	3.77	3.77	-	-	-	5.12	6.99
3 × 1/2	2.67	2.67	-	3.71	3.71	-	-	-	5.05	6.89
3 1/2 × 3	4.00	4.00	-	5.64	5.64	-	-	-	-	-

Approximate Weights of Buttwelding Fittings - Reducing Tees

NPS	DIN S3	SGP	Sch5s	Sch10s	Sch40s	Sch80s	Sch5	Sch10	Sch20	Sch30
3½ × 2½	-	2.21	1.54	2.24	3.86	5.44	1.54	2.24	-	3.20
3½ × 2	-	2.09	1.51	2.19	3.77	5.32	1.51	2.19	-	3.13
3½ × 1½	-	2.03	1.45	2.11	3.63	5.12	1.45	2.11	-	3.01
3½ × 1¼	-	2.00	1.42	2.06	3.55	5.01	1.42	2.06	-	2.95
4 × 3½	-	3.00	2.09	3.00	5.36	7.61	2.09	3.00	-	4.23
4 × 3	3.00	2.92	2.06	2.95	5.27	7.48	2.06	2.95	-	4.16
4 × 2½	2.90	2.84	2.00	2.87	5.13	7.28	2.00	2.87	-	4.05
4 × 2	2.85	2.72	1.99	2.86	5.11	7.26	1.99	2.86	-	4.04
4 × 1½	2.80	2.66	1.97	2.83	5.06	7.19	1.97	2.83	-	4.00
4 × 1¼	-	2.60	1.95	2.80	5.00	7.10	1.95	2.80	-	3.95
4 × 1	-	2.55	1.93	2.77	4.94	7.01	1.93	2.77	-	3.90
5 × 4	4.70	4.30	4.48	5.43	9.53	13.8	4.48	5.43	-	-
5 × 3½	-	4.17	4.38	5.31	9.31	13.5	4.38	5.31	-	-
5 × 3	4.60	4.08	4.27	5.18	9.08	13.2	4.27	5.18	-	-
5 × 2½	4.60	4.00	4.16	5.04	8.85	12.8	4.16	5.04	-	-
5 × 2	4.50	3.90	4.06	4.92	8.63	12.5	4.06	4.92	-	-
5 × 1½	-	3.60	4.00	4.86	8.52	12.4	4.00	4.86	-	-
5 × 1¼	-	3.30	3.95	4.79	8.41	12.2	3.95	4.79	-	-
6 × 5	6.90	6.45	6.73	8.30	15.7	24.1	6.73	8.30	-	-
6 × 4	6.70	6.23	6.54	8.06	15.2	23.4	6.54	8.06	-	-
6 × 3½	-	6.09	6.44	7.94	15.0	23.1	6.44	7.94	-	-
6 × 3	6.60	6.01	6.35	7.82	14.8	22.7	6.35	7.82	-	-
6 × 2½	6.50	5.92	6.25	7.70	14.5	22.4	6.25	7.70	-	-
6 × 2	-	5.80	6.15	7.58	14.3	22.0	6.15	7.58	-	-
8 × 6	14.4	11.9	9.07	12.5	24.5	38.0	9.07	12.5	20.8	23.3
8 × 5	13.6	11.5	8.90	12.3	24.1	37.3	8.90	12.3	20.5	22.9
8 × 4	13.1	11.3	8.69	12.0	23.5	36.4	8.69	12.0	20.0	22.3
8 × 3½	-	11.0	8.52	11.8	23.0	35.7	8.52	11.8	19.6	21.9
8 × 3	12.8	10.8	8.44	11.6	22.8	35.3	8.44	11.6	19.4	21.7

NPS	STD	Sch40	Sch60	XS	Sch80	Sch100	Sch120	Sch140	Sch160	XXS
3½ × 2½	3.86	3.86	-	5.44	5.44	-	-	-	-	-
3½ × 2	3.77	3.77	-	5.32	5.32	-	-	-	-	-
3½ × 1½	3.63	3.63	-	5.12	5.12	-	-	-	-	-
3½ × 1¼	3.55	3.55	-	5.01	5.01	-	-	-	-	-
4 × 3½	5.36	5.36	-	7.61	7.61	-	9.92	-	11.2	14.2
4 × 3	5.27	5.27	-	7.48	7.48	-	9.75	-	11.0	13.9
4 × 2½	5.13	5.13	-	7.28	7.28	-	9.49	-	10.7	13.5
4 × 2	5.11	5.11	-	7.26	7.26	-	9.45	-	10.6	13.5
4 × 1½	5.06	5.06	-	7.19	7.19	-	9.36	-	10.5	13.4
4 × 1¼	5.00	5.00	-	7.10	7.10	-	9.25	-	10.4	13.2
4 × 1	4.94	4.94	-	7.01	7.01	-	9.14	-	10.3	13.0
5 × 4	9.53	9.53	-	13.8	13.8	-	18.5	-	21.4	25.7
5 × 3½	9.31	9.31	-	13.5	13.5	-	18.1	-	21.0	25.1
5 × 3	9.08	9.08	-	13.2	13.2	-	17.6	-	20.4	24.5
5 × 2½	8.85	8.85	-	12.8	12.8	-	17.2	-	19.9	23.9
5 × 2	8.63	8.63	-	12.5	12.5	-	16.7	-	19.4	23.3
5 × 1½	8.52	8.52	-	12.4	12.4	-	16.5	-	19.2	23.0
5 × 1¼	8.41	8.41	-	12.2	12.2	-	16.3	-	18.9	22.7
6 × 5	15.7	15.7	-	24.1	24.1	-	29.3	-	37.4	44.9
6 × 4	15.2	15.2	-	23.4	23.4	-	28.4	-	36.4	43.7
6 × 3½	15.0	15.0	-	23.1	23.1	-	28.0	-	35.8	43.0
6 × 3	14.8	14.8	-	22.7	22.7	-	27.6	-	35.3	42.4
6 × 2½	14.5	14.5	-	22.4	22.4	-	27.2	-	34.7	41.7
6 × 2	14.3	14.3	-	22.0	22.0	-	26.7	-	34.2	41.0
8 × 6	24.5	24.5	30.9	38.0	38.0	45.1	51.0	57.4	64.2	62.0
8 × 5	24.1	24.1	30.3	37.3	37.3	44.3	50.0	56.3	63.0	60.9
8 × 4	23.5	23.5	29.6	36.4	36.4	43.2	48.9	55.0	61.5	59.4
8 × 3½	23.0	23.0	29.0	35.7	35.7	42.4	47.9	53.9	60.4	58.3
8 × 3	22.8	22.8	28.7	35.3	35.3	42.0	47.4	53.4	59.7	57.7

Approximate Weights of Buttwelding Fittings - Reducing Tees

NPS	DIN S3	SGP	Sch5s	Sch10s	Sch40s	Sch80s	Sch5	Sch10	Sch20	Sch30
10 × 8	20.3	20.4	15.3	19.2	38.4	52.6	15.3	19.2	28.8	35.7
10 × 6	19.5	19.5	15.1	18.8	37.7	51.6	15.1	18.8	28.3	35.0
10 × 5	19.0	19.2	14.7	18.4	36.8	50.4	14.7	18.4	27.6	34.2
10 × 4	18.6	18.9	14.5	18.2	36.3	49.8	14.5	18.2	27.2	33.8
10 × 3	-	18.5	14.4	18.0	36.0	49.3	14.4	18.0	27.0	33.5
12 × 10	34.1	30.4	24.9	28.6	54.0	71.9	24.9	28.6	39.4	52.4
12 × 8	33.7	29.0	24.4	28.2	53.1	70.7	24.4	28.2	38.8	51.5
12 × 6	33.0	28.1	23.8	27.4	51.8	68.8	23.8	27.4	37.8	50.2
12 × 5	32.6	27.8	23.0	26.5	49.9	66.4	23.0	26.5	36.5	48.4
12 × 4	-	27.4	22.6	26.1	49.2	65.4	22.6	26.1	35.9	47.7
14 × 12	58.0	42.7	33.4	40.0	72.6	96.6	33.4	53.0	66.1	72.6
14 × 10	57.0	41.2	33.0	39.5	71.7	95.4	33.0	52.4	65.3	71.7
14 × 8	55.0	40.0	32.4	38.7	70.4	93.6	32.4	51.4	64.0	70.4
14 × 6	54.0	39.0	31.5	37.7	68.5	91.1	31.5	50.0	62.3	68.5
14 × 5	-	37.8	30.8	36.9	67.0	89.1	30.8	48.9	61.0	67.0
16 × 14	81.0	54.2	42.3	48.4	88.1	117	42.3	64.3	80.2	88.1
16 × 12	80.0	52.7	41.6	47.7	86.7	115	41.6	63.3	78.9	86.7
16 × 10	78.0	51.2	40.5	46.4	84.4	112	40.5	61.6	76.8	84.4
16 × 8	76.0	49.4	39.2	45.0	81.7	109	39.2	59.7	74.4	81.7
16 × 6	74.0	48.5	37.7	43.2	78.5	104	37.7	57.3	71.5	78.5
18 × 16	128	67.9	52.5	60.2	109	146	52.5	79.9	99.6	128
18 × 14	125	66.9	51.4	58.9	107	143	51.4	78.2	97.5	125
18 × 12	123	65.4	50.1	57.4	104	139	50.1	76.2	95.0	122
18 × 10	121	63.4	48.4	55.4	101	134	48.4	73.6	91.7	118
18 × 8	118	62.0	46.0	52.7	96	127	46.0	69.9	87.2	112
20 × 18	157	84.2	84.9	98.8	154	205	84.9	113	154	205
20 × 16	155	82.1	84.4	98.2	153	204	84.4	112	153	204
20 × 14	153	81.1	83.9	97.6	153	203	83.9	111	153	203
20 × 12	152	79.2	83.4	97.1	152	202	83.4	111	152	202

NPS	STD	Sch40	Sch60	XS	Sch80	Sch100	Sch120	Sch140	Sch160	XXS
10 × 8	38.4	38.4	52.6	52.6	62.5	75.6	82.5	97.8	106	97.8
10 × 6	37.7	37.7	51.6	51.6	61.4	74.2	81.0	96.1	104	96.1
10 × 5	36.8	36.8	50.4	50.4	59.9	72.4	79.1	93.8	102	93.8
10 × 4	36.3	36.3	49.8	49.8	59.2	71.6	78.1	92.6	101	92.6
10 × 3	36.0	36.0	49.3	49.3	58.7	70.9	77.4	91.8	100	91.8
12 × 10	54.0	58.4	81.1	71.9	98.9	113	134	146	170	134
12 × 8	53.1	57.4	79.7	70.7	97.2	111	132	143	167	132
12 × 6	51.8	55.9	77.6	68.8	94.7	108	128	140	163	128
12 × 5	49.9	53.9	74.9	66.4	91.4	104	124	135	157	124
12 × 4	49.2	53.1	73.8	65.4	90.0	103	122	133	155	122
14 × 12	72.6	85.0	115	96.6	135	169	197	218	245	-
14 × 10	71.7	83.9	113	95.4	133	167	194	215	242	-
14 × 8	70.4	82.3	111	93.6	131	164	191	211	237	-
14 × 6	68.5	80.2	108	91.1	127	160	186	206	231	-
14 × 5	67.0	78.4	106	89.1	125	156	182	201	226	-
16 × 14	88.1	117	154	117	184	225	257	304	336	-
16 × 12	86.7	115	152	115	181	222	253	299	331	-
16 × 10	84.4	112	148	112	176	216	247	291	323	-
16 × 8	81.7	109	143	109	171	209	239	282	312	-
16 × 6	78.5	104	137	104	164	201	229	271	300	-
18 × 16	109	164	204	146	255	303	361	410	467	-
18 × 14	107	161	199	143	250	297	354	402	457	-
18 × 12	104	157	194	139	243	289	345	392	446	-
18 × 10	101	151	187	134	235	279	333	378	430	-
18 × 8	96	144	178	127	223	265	316	359	409	-
20 × 18	154	244	310	205	395	474	556	648	729	-
20 × 16	153	242	308	204	393	471	552	644	724	-
20 × 14	153	241	307	203	391	468	549	641	720	-
20 × 12	152	240	305	202	388	466	546	637	716	-

Approximate Weights of Buttwelding Fittings - Reducing Tees

NPS	DIN S3	SGP/LG	Sch5s	Sch10s	Sch40s	Sch80s	Sch5	Sch10	Sch20	Sch30
20 × 10	150	78	83	96	151	200	83	110	151	200
20 × 8	148	76	82	96	150	199	82	109	150	199
22 × 20	-	103	103	120	187	249	103	137	187	249
22 × 18	-	101	102	119	186	248	102	136	186	248
22 × 16	-	99	102	119	185	246	102	135	185	246
22 × 14	-	97	101	118	184	245	101	135	184	245
22 × 12	-	-	101	117	183	244	101	134	183	244
22 × 10	-	-	100	117	183	243	100	133	183	243
24 × 22	-	115	153	174	238	317	153	174	238	358
24 × 20	240	114	152	173	237	315	152	173	237	355
24 × 18	239	111	151	172	236	313	151	172	236	353
24 × 16	237	106	150	171	234	312	150	171	234	351
24 × 14	234	102	149	170	233	310	149	170	233	349
24 × 12	231	99	148	169	232	308	148	169	232	347
24 × 10	230	-	147	168	230	306	147	168	230	345
26 × 24	-	144	-	-	-	-	-	286	459	-
26 × 22	-	141	-	-	-	-	-	285	456	-
26 × 20	-	138	-	-	-	-	-	283	453	-
26 × 18	-	135	-	-	-	-	-	281	450	-
26 × 16	-	163	-	-	-	-	-	279	447	-
26 × 14	-	-	-	-	-	-	-	277	444	-
26 × 12	-	-	-	-	-	-	-	275	441	-
28 × 26	-	160	-	-	-	-	-	326	523	656
28 × 24	385	157	-	-	-	-	-	323	517	650
28 × 22	-	154	-	-	-	-	-	320	513	645
28 × 20	379	-	-	-	-	-	-	318	509	640
28 × 18	377	-	-	-	-	-	-	316	507	636
28 × 16	374	-	-	-	-	-	-	314	503	631
28 × 14	371	-	-	-	-	-	-	311	499	626
28 × 12	368	-	-	-	-	-	-	309	495	621

NPS	STD	Sch40	Sch60	XS	Sch80	Sch100	Sch120	Sch140	Sch160	XXS
20 × 10	151	238	303	200	386	463	543	633	711	-
20 × 8	150	237	301	199	384	460	539	629	707	-
22 × 20	187	-	406	249	522	617	730	842	954	-
22 × 18	186	-	404	248	519	614	726	838	949	-
22 × 16	185	-	402	246	517	611	722	834	945	-
22 × 14	184	-	400	245	514	608	719	829	940	-
22 × 12	183	-	398	244	512	605	715	825	935	-
22 × 10	183	-	396	243	509	602	712	821	931	-
24 × 22	238	436	572	317	720	875	1037	1180	1340	-
24 × 20	237	434	569	315	716	870	1031	1173	1332	-
24 × 18	236	431	566	313	712	865	1025	1166	1324	-
24 × 16	234	429	562	312	707	860	1019	1160	1317	-
24 × 14	233	426	559	310	703	855	1013	1153	1309	-
24 × 12	232	424	556	308	699	850	1007	1146	1301	-
24 × 10	230	421	552	306	695	845	1001	1139	1294	-
26 × 24	345	-	-	459	-	-	-	-	-	-
26 × 22	343	-	-	456	-	-	-	-	-	-
26 × 20	341	-	-	453	-	-	-	-	-	-
26 × 18	338	-	-	450	-	-	-	-	-	-
26 × 16	336	-	-	447	-	-	-	-	-	-
26 × 14	334	-	-	444	-	-	-	-	-	-
26 × 12	331	-	-	441	-	-	-	-	-	-
28 × 26	393	-	-	523	-	-	-	-	-	-
28 × 24	389	-	-	517	-	-	-	-	-	-
28 × 22	386	-	-	513	-	-	-	-	-	-
28 × 20	383	-	-	509	-	-	-	-	-	-
28 × 18	381	-	-	507	-	-	-	-	-	-
28 × 16	378	-	-	503	-	-	-	-	-	-
28 × 14	375	-	-	499	-	-	-	-	-	-
28 × 12	372	-	-	495	-	-	-	-	-	-

Approximate Weights of Buttwelding Fittings - Reducing Tees

NPS	DIN S3	LG	Sch5s	Sch10s	Sch40s	Sch80s	Sch10	Sch20	Sch30	STD	Sch40	XS
30 × 28	-	188	349	435	478	636	397	636	798	478	-	636
30 × 26	-	185	346	432	474	631	394	631	792	474	-	631
30 × 24	-	182	343	428	470	625	390	625	785	470	-	625
30 × 22	-	179	340	423	465	619	386	619	777	465	-	619
30 × 20	-	-	336	419	461	613	382	613	770	461	-	613
30 × 18	-	-	333	415	456	607	379	607	762	456	-	607
30 × 16	-	-	329	410	451	600	374	600	753	451	-	600
30 × 14	-	-	327	408	448	596	372	596	748	448	-	596
30 × 12	-	-	325	405	445	592	369	592	743	445	-	592
30 × 10	-	-	323	402	442	588	367	588	738	442	-	588
32 × 30	-	213	-	-	-	-	431	690	867	519	950	690
32 × 28	511	209	-	-	-	-	428	686	862	516	944	686
32 × 26	-	208	-	-	-	-	426	682	857	513	939	682
32 × 24	505	205	-	-	-	-	423	678	852	510	933	678
32 × 22	-	-	-	-	-	-	421	674	847	507	928	674
32 × 20	499	-	-	-	-	-	418	670	842	504	922	670
32 × 18	496	-	-	-	-	-	416	666	837	501	917	666
32 × 16	493	-	-	-	-	-	413	662	832	498	911	662
32 × 14	490	-	-	-	-	-	411	658	827	495	906	658
34 × 32	-	243	-	-	-	-	487	781	980	587	1074	781
34 × 30	-	238	-	-	-	-	485	777	975	584	1069	777
34 × 28	-	236	-	-	-	-	482	773	970	581	1063	773
34 × 26	-	232	-	-	-	-	480	769	965	578	1058	769
34 × 24	-	-	-	-	-	-	477	765	960	575	1052	765
34 × 22	-	-	-	-	-	-	475	761	955	572	1047	761
34 × 20	-	-	-	-	-	-	472	757	950	569	1041	757
34 × 18	-	-	-	-	-	-	470	753	945	566	1036	753
34 × 16	-	-	-	-	-	-	467	749	940	563	1030	749
36 × 34	-	271	-	-	-	-	558	894	1122	672	1344	894
36 × 32	662	269	-	-	-	-	555	890	1117	669	1338	890
36 × 30	-	264	-	-	-	-	553	886	1112	666	1332	886
36 × 28	656	260	-	-	-	-	550	882	1107	663	1326	882
36 × 26	-	-	-	-	-	-	548	878	1102	660	1320	878
36 × 24	650	-	-	-	-	-	545	874	1097	657	1314	874
36 × 22	-	-	-	-	-	-	543	870	1092	654	1308	870
36 × 20	645	-	-	-	-	-	540	866	1087	651	1302	866
36 × 18	642	-	-	-	-	-	538	862	1082	648	1296	862
36 × 16	639	-	-	-	-	-	535	858	1077	645	1290	858
38 × 36	-	306	-	-	-	-	-	-	-	921	-	1225
38 × 34	-	302	-	-	-	-	-	-	-	917	-	1220
38 × 32	-	298	-	-	-	-	-	-	-	913	-	1214
38 × 30	-	292	-	-	-	-	-	-	-	909	-	1209
38 × 28	-	-	-	-	-	-	-	-	-	905	-	1204
38 × 26	-	-	-	-	-	-	-	-	-	901	-	1198
38 × 24	-	-	-	-	-	-	-	-	-	897	-	1193
38 × 22	-	-	-	-	-	-	-	-	-	893	-	1188
38 × 20	-	-	-	-	-	-	-	-	-	889	-	1182
38 × 18	-	-	-	-	-	-	-	-	-	885	-	1177
40 × 38	-	340	-	-	-	-	-	-	-	1023	-	1361
40 × 36	1009	335	-	-	-	-	-	-	-	1019	-	1355
40 × 34	-	331	-	-	-	-	-	-	-	1015	-	1350
40 × 32	1001	326	-	-	-	-	-	-	-	1011	-	1345
40 × 30	-	-	-	-	-	-	-	-	-	1007	-	1339
40 × 28	993	-	-	-	-	-	-	-	-	1003	-	1334
40 × 26	-	-	-	-	-	-	-	-	-	999	-	1329

Approximate Weights of Buttwelding Fittings - Reducing Tees

NPS	DIN S3	LG	Sch5s	Sch10s	Sch40s	Sch80s	Sch10	Sch20	Sch30	STD	Sch40	XS
40 × 24	985	-	-	-	-	-	-	-	-	995	-	1323
40 × 22	-	-	-	-	-	-	-	-	-	991	-	1318
40 × 20	977	-	-	-	-	-	-	-	-	987	-	1313
40 × 18	973	-	-	-	-	-	-	-	-	983	-	1307
42 × 40	-	350	-	-	-	-	-	-	-	1311	-	1744
42 × 38	-	348	-	-	-	-	-	-	-	1307	-	1738
42 × 36	-	346	-	-	-	-	-	-	-	1303	-	1733
42 × 34	-	341	-	-	-	-	-	-	-	1299	-	1728
42 × 32	-	-	-	-	-	-	-	-	-	1295	-	1722
42 × 30	-	-	-	-	-	-	-	-	-	1291	-	1717
42 × 28	-	-	-	-	-	-	-	-	-	1287	-	1712
42 × 26	-	-	-	-	-	-	-	-	-	1283	-	1706
42 × 24	-	-	-	-	-	-	-	-	-	1279	-	1701
42 × 22	-	-	-	-	-	-	-	-	-	1275	-	1696
42 × 20	-	-	-	-	-	-	-	-	-	1271	-	1690
42 × 18	-	-	-	-	-	-	-	-	-	1267	-	1685
42 × 16	-	-	-	-	-	-	-	-	-	1263	-	1680
44 × 42	-	394	-	-	-	-	-	-	-	1351	-	1797
44 × 40	-	389	-	-	-	-	-	-	-	1346	-	1790
44 × 38	-	385	-	-	-	-	-	-	-	1341	-	1784
44 × 36	-	380	-	-	-	-	-	-	-	1336	-	1777
44 × 34	-	-	-	-	-	-	-	-	-	1331	-	1770
44 × 32	-	-	-	-	-	-	-	-	-	1326	-	1764
44 × 30	-	-	-	-	-	-	-	-	-	1321	-	1757
44 × 28	-	-	-	-	-	-	-	-	-	1316	-	1750
44 × 26	-	-	-	-	-	-	-	-	-	1311	-	1744
44 × 24	-	-	-	-	-	-	-	-	-	1306	-	1737
44 × 22	-	-	-	-	-	-	-	-	-	1301	-	1730
44 × 20	-	-	-	-	-	-	-	-	-	1296	-	1724
46 × 44	-	432	-	-	-	-	-	-	-	1403	-	1866
46 × 42	-	427	-	-	-	-	-	-	-	1398	-	1859
46 × 40	-	423	-	-	-	-	-	-	-	1393	-	1853
46 × 38	-	420	-	-	-	-	-	-	-	1388	-	1846
46 × 36	-	-	-	-	-	-	-	-	-	1383	-	1839
46 × 34	-	-	-	-	-	-	-	-	-	1378	-	1833
46 × 32	-	-	-	-	-	-	-	-	-	1373	-	1826
46 × 30	-	-	-	-	-	-	-	-	-	1368	-	1819
46 × 28	-	-	-	-	-	-	-	-	-	1363	-	1813
46 × 26	-	-	-	-	-	-	-	-	-	1358	-	1806
46 × 24	-	-	-	-	-	-	-	-	-	1353	-	1799
46 × 22	-	-	-	-	-	-	-	-	-	1348	-	1793
48 × 46	-	472	-	-	-	-	-	-	-	1452	-	1931
48 × 44	-	470	-	-	-	-	-	-	-	1447	-	1925
48 × 42	-	462	-	-	-	-	-	-	-	1442	-	1918
48 × 40	1423	455	-	-	-	-	-	-	-	1437	-	1911
48 × 38	-	-	-	-	-	-	-	-	-	1432	-	1905
48 × 36	1413	-	-	-	-	-	-	-	-	1427	-	1898
48 × 34	-	-	-	-	-	-	-	-	-	1422	-	1891
48 × 32	1403	-	-	-	-	-	-	-	-	1417	-	1885
48 × 30	-	-	-	-	-	-	-	-	-	1412	-	1878
48 × 28	1393	-	-	-	-	-	-	-	-	1407	-	1871
48 × 26	-	-	-	-	-	-	-	-	-	1402	-	1865
48 × 24	1383	-	-	-	-	-	-	-	-	1397	-	1858
48 × 22	-	-	-	-	-	-	-	-	-	1392	-	1851

Approximate Weights of Buttwelding Fittings - Con&Ecc Reducers

NPS	DIN S3	SGP	Sch5s	Sch10s	Sch40s	Sch80s	Sch5	Sch10	Sch20	Sch30
3/4 × 1/2	0.05	0.06	0.05	0.06	0.08	0.11	0.05	0.06	-	0.07
1 × 3/4	0.10	0.11	0.09	0.14	0.16	0.22	0.09	0.14	-	0.14
1 × 1/2	0.09	0.10	0.09	0.14	0.16	0.22	0.09	0.14	-	0.14
1 1/4 × 1	0.13	0.16	0.12	0.20	0.23	0.31	0.12	0.20	-	0.19
1 1/4 × 3/4	0.12	0.15	0.09	0.15	0.18	0.24	0.09	0.15	-	0.15
1 1/4 × 1/2	0.11	0.13	0.09	0.15	0.18	0.24	0.09	0.15	-	0.15
1 1/2 × 1 1/4	0.21	0.24	0.16	0.27	0.32	0.44	0.16	0.27	-	0.28
1 1/2 × 1	0.19	0.21	0.14	0.23	0.28	0.39	0.14	0.23	-	0.24
1 1/2 × 3/4	0.17	0.20	0.12	0.21	0.25	0.35	0.12	0.21	-	0.22
1 1/2 × 1/2	-	0.18	0.11	0.19	0.23	0.32	0.11	0.19	-	0.20
2 × 1 1/2	0.34	0.37	0.19	0.32	0.41	0.58	0.19	0.32	-	0.33
2 × 1 1/4	0.31	0.35	0.17	0.30	0.38	0.54	0.17	0.30	-	0.31
2 × 1	0.29	0.31	0.16	0.27	0.35	0.50	0.16	0.27	-	0.28
2 × 3/4	0.28	0.29	0.15	0.25	0.32	0.45	0.15	0.25	-	0.26
2 × 1/2	-	0.28	0.14	0.24	0.31	0.44	0.14	0.24	-	0.25
2 1/2 × 2	0.47	0.60	0.31	0.44	0.68	0.92	0.31	0.44	-	0.63
2 1/2 × 1 1/2	0.45	0.55	0.28	0.41	0.63	0.86	0.28	0.41	-	0.59
2 1/2 × 1 1/4	0.43	0.52	0.26	0.37	0.57	0.78	0.26	0.37	-	0.53
2 1/2 × 1	0.42	0.48	0.26	0.37	0.57	0.78	0.26	0.37	-	0.53
2 1/2 × 3/4	-	0.47	0.25	0.36	0.55	0.75	0.25	0.36	-	0.51
2 1/2 × 1/2	-	0.46	0.24	0.35	0.54	0.73	0.24	0.35	-	0.50
3 × 2 1/2	0.64	0.73	0.38	0.56	0.91	1.26	0.38	0.56	-	0.79
3 × 2	0.62	0.66	0.34	0.50	0.82	1.14	0.34	0.50	-	0.71
3 × 1 1/2	0.60	0.62	0.32	0.47	0.77	1.07	0.32	0.47	-	0.67
3 × 1 1/4	0.59	0.59	0.31	0.45	0.73	1.01	0.31	0.45	-	0.64
3 × 1	-	0.57	0.30	0.43	0.71	0.99	0.30	0.43	-	0.62
3 × 3/4	-	0.56	0.29	0.42	0.69	0.96	0.29	0.42	-	0.60
3 × 1/2	-	0.55	0.28	0.41	0.67	0.93	0.28	0.41	-	0.58

NPS	STD	Sch40	Sch60	XS	Sch80	Sch100	Sch120	Sch140	Sch160	XXS
3/4 × 1/2	0.08	0.08	-	0.11	0.11	-	-	-	0.16	0.20
1 × 3/4	0.16	0.16	-	0.22	0.22	-	-	-	0.30	0.40
1 × 1/2	0.16	0.16	-	0.22	0.22	-	-	-	0.30	0.40
1 1/4 × 1	0.23	0.23	-	0.31	0.31	-	-	-	0.41	0.58
1 1/4 × 3/4	0.18	0.18	-	0.24	0.24	-	-	-	0.32	0.46
1 1/4 × 1/2	0.18	0.18	-	0.24	0.24	-	-	-	0.32	0.46
1 1/2 × 1 1/4	0.32	0.32	-	0.44	0.44	-	-	-	0.62	0.82
1 1/2 × 1	0.28	0.28	-	0.39	0.39	-	-	-	0.54	0.72
1 1/2 × 3/4	0.25	0.25	-	0.35	0.35	-	-	-	0.49	0.64
1 1/2 × 1/2	0.23	0.23	-	0.32	0.32	-	-	-	0.45	0.59
2 × 1 1/2	0.41	0.41	-	0.58	0.58	-	-	-	0.85	1.08
2 × 1 1/4	0.38	0.38	-	0.54	0.54	-	-	-	0.79	1.00
2 × 1	0.35	0.35	-	0.50	0.50	-	-	-	0.73	0.92
2 × 3/4	0.32	0.32	-	0.45	0.45	-	-	-	0.67	0.84
2 × 1/2	0.31	0.31	-	0.44	0.44	-	-	-	0.64	0.82
2 1/2 × 2	0.68	0.68	-	0.92	0.92	-	-	-	1.26	1.72
2 1/2 × 1 1/2	0.63	0.63	-	0.86	0.86	-	-	-	1.17	1.59
2 1/2 × 1 1/4	0.57	0.57	-	0.78	0.78	-	-	-	1.05	1.44
2 1/2 × 1	0.57	0.57	-	0.78	0.78	-	-	-	1.05	1.44
2 1/2 × 3/4	0.55	0.55	-	0.75	0.75	-	-	-	1.02	1.39
2 1/2 × 1/2	0.54	0.54	-	0.73	0.73	-	-	-	1.00	1.37
3 × 2 1/2	0.91	0.91	-	1.26	1.26	-	-	-	1.72	2.35
3 × 2	0.82	0.82	-	1.14	1.14	-	-	-	1.55	2.12
3 × 1 1/2	0.77	0.77	-	1.07	1.07	-	-	-	1.46	1.99
3 × 1 1/4	0.73	0.73	-	1.01	1.01	-	-	-	1.38	1.88
3 × 1	0.71	0.71	-	0.99	0.99	-	-	-	1.34	1.83
3 × 3/4	0.69	0.69	-	0.96	0.96	-	-	-	1.30	1.78
3 × 1/2	0.67	0.67	-	0.93	0.93	-	-	-	1.27	1.73

Approximate Weights of Buttwelding Fittings - Con&Ecc Reducers

NPS	DIN S3	SGP	Sch5s	Sch10s	Sch40s	Sch80s	Sch5	Sch10	Sch20	Sch30
3½ × 3	-	0.96	0.57	0.83	1.43	2.02	0.57	0.83	-	1.19
3½ × 2½	-	0.90	0.52	0.76	1.31	1.85	0.52	0.76	-	1.09
3½ × 2	-	0.83	0.50	0.73	1.25	1.76	0.50	0.73	-	1.04
3½ × 1½	-	0.77	0.46	0.66	1.14	1.61	0.46	0.66	-	0.95
3½ × 1¼	-	0.75	0.44	0.63	1.09	1.54	0.44	0.63	-	0.90
4 × 3½	-	1.17	0.62	0.89	1.59	2.26	0.62	0.89	-	1.26
4 × 3	1.00	1.10	0.60	0.86	1.54	2.19	0.60	0.86	-	1.22
4 × 2½	0.96	1.04	0.58	0.83	1.48	2.10	0.58	0.83	-	1.17
4 × 2	0.94	0.97	0.53	0.76	1.36	1.93	0.53	0.76	-	1.07
4 × 1½	0.92	0.91	0.51	0.73	1.31	1.86	0.51	0.73	-	1.03
4 × 1¼	-	0.88	0.50	0.72	1.28	1.82	0.50	0.72	-	1.01
4 × 1	-	0.86	0.49	0.71	1.26	1.79	0.49	0.71	-	1.00
5 × 4	1.80	1.74	1.28	1.55	2.72	3.94	1.28	1.55	-	-
5 × 3½	-	1.65	1.23	1.49	2.61	3.78	1.23	1.49	-	-
5 × 3	1.76	1.58	1.18	1.43	2.50	3.63	1.18	1.43	-	-
5 × 2½	1.73	1.50	1.12	1.36	2.38	3.45	1.12	1.36	-	-
5 × 2	1.71	1.41	1.07	1.29	2.27	3.29	1.07	1.29	-	-
5 × 1½	-	1.33	1.06	1.28	2.25	3.26	1.06	1.28	-	-
5 × 1¼	-	1.26	1.03	1.25	2.20	3.19	1.03	1.25	-	-
6 × 5	2.82	2.55	1.66	2.05	3.86	5.94	1.66	2.05	-	-
6 × 4	2.77	2.36	1.61	1.99	3.75	5.78	1.61	1.99	-	-
6 × 3½	-	2.27	1.59	1.96	3.69	5.68	1.59	1.96	-	-
6 × 3	2.72	2.18	1.56	1.92	3.63	5.59	1.56	1.92	-	-
6 × 2½	2.66	2.09	1.41	1.74	3.29	5.07	1.41	1.74	-	-
6 × 2	-	1.98	0.97	1.19	2.25	3.47	0.97	1.19	-	-
8 × 6	4.71	4.17	2.23	3.07	6.02	9.33	2.23	3.07	5.12	5.72
8 × 5	4.50	3.87	2.02	2.78	5.45	8.45	2.02	2.78	4.63	5.18
8 × 4	4.46	3.67	1.85	2.54	4.99	7.73	1.85	2.54	4.24	4.74

NPS	STD	Sch40	Sch60	XS	Sch80	Sch100	Sch120	Sch140	Sch160	XXS
3½ × 3	1.43	1.43	-	2.02	2.02	-	-	-	-	-
3½ × 2½	1.31	1.31	-	1.85	1.85	-	-	-	-	-
3½ × 2	1.25	1.25	-	1.76	1.76	-	-	-	-	-
3½ × 1½	1.14	1.14	-	1.61	1.61	-	-	-	-	-
3½ × 1¼	1.09	1.09	-	1.54	1.54	-	-	-	-	-
4 × 3½	1.59	1.59	-	2.26	2.26	-	2.94	-	3.31	4.20
4 × 3	1.54	1.54	-	2.19	2.19	-	2.85	-	3.20	4.07
4 × 2½	1.48	1.48	-	2.10	2.10	-	2.74	-	3.08	3.91
4 × 2	1.36	1.36	-	1.93	1.93	-	2.52	-	2.83	3.59
4 × 1½	1.31	1.31	-	1.86	1.86	-	2.42	-	2.72	3.46
4 × 1¼	1.28	1.28	-	1.82	1.82	-	2.37	-	2.66	3.38
4 × 1	1.26	1.26	-	1.79	1.79	-	2.33	-	2.62	3.33
5 × 4	2.72	2.72	-	3.94	3.94	-	5.28	-	6.12	7.34
5 × 3½	2.61	2.61	-	3.78	3.78	-	5.06	-	5.87	7.05
5 × 3	2.50	2.50	-	3.63	3.63	-	4.85	-	5.63	6.75
5 × 2½	2.38	2.38	-	3.45	3.45	-	4.62	-	5.36	6.43
5 × 2	2.27	2.27	-	3.29	3.29	-	4.40	-	5.11	6.13
5 × 1½	2.25	2.25	-	3.26	3.26	-	4.37	-	5.06	6.08
5 × 1¼	2.20	2.20	-	3.19	3.19	-	4.27	-	4.95	5.94
6 × 5	3.86	3.86	-	5.94	5.94	-	7.22	-	9.23	11.1
6 × 4	3.75	3.75	-	5.78	5.78	-	7.01	-	8.96	10.8
6 × 3½	3.69	3.69	-	5.68	5.68	-	6.9	-	8.82	10.6
6 × 3	3.63	3.63	-	5.59	5.59	-	6.79	-	8.68	10.4
6 × 2½	3.29	3.29	-	5.07	5.07	-	6.15	-	7.86	9.44
6 × 2	2.25	2.25	-	3.47	3.47	-	4.21	-	5.38	6.46
8 × 6	6.02	6.02	7.59	9.33	9.33	11.1	12.5	14.1	15.8	15.2
8 × 5	5.45	5.45	6.87	8.45	8.45	10.0	11.3	12.8	14.3	13.8
8 × 4	4.99	4.99	6.29	7.73	7.73	9.18	10.4	11.7	13.1	12.6

Approximate Weights of Buttwelding Fittings - Con&Ecc Reducers

NPS	DIN S3	SGP	Sch5s	Sch10s	Sch40s	Sch80s	Sch5	Sch10	Sch20	Sch30
8 × 3½	-	3.55	1.81	2.49	4.88	7.56	1.81	2.49	4.15	4.64
8 × 3	4.32	3.43	1.78	2.46	4.82	7.47	1.78	2.46	4.10	4.58
10 × 8	7.40	6.87	4.00	5.00	9.99	13.69	4.00	5.00	7.49	9.29
10 × 6	7.33	6.32	3.90	4.88	9.76	13.37	3.90	4.88	7.32	9.08
10 × 5	7.27	6.06	3.81	4.77	9.53	13.06	3.81	4.77	7.15	8.86
10 × 4	7.21	5.80	3.63	4.54	9.08	12.44	3.63	4.54	6.81	8.44
10 × 3	-	5.50	3.60	4.50	9.00	12.33	3.60	4.50	6.75	8.37
12 × 10	11.29	9.97	7.08	8.16	15.4	20.5	7.08	8.16	11.2	14.9
12 × 8	11.2	9.29	6.67	7.69	14.5	19.3	6.67	7.69	10.6	14.1
12 × 6	11.1	8.69	6.49	7.47	14.1	18.8	6.49	7.47	10.3	13.7
12 × 5	11.0	8.39	6.26	7.21	13.6	18.1	6.26	7.21	9.93	13.2
12 × 4	-	8.00	6.21	7.16	13.5	18.0	6.21	7.16	9.86	13.1
14 × 12	22.54	21.2	12.5	15.0	27.2	36.2	12.5	19.9	24.8	27.2
14 × 10	22.1	19.7	12.4	14.8	26.9	35.8	12.4	19.6	24.5	26.9
14 × 8	21.7	18.3	12.2	14.6	26.6	35.4	12.2	19.4	24.2	26.6
14 × 6	21.4	16.9	12.1	14.5	26.3	35.0	12.1	19.2	23.9	26.3
14 × 5	-	15.7	12.0	14.3	26.0	34.6	12.0	19.0	23.7	26.0
16 × 14	30.5	25.9	15.5	17.7	32.2	42.8	15.5	23.5	29.3	32.2
16 × 12	30.0	24.1	15.3	17.5	31.8	42.3	15.3	23.2	28.9	31.8
16 × 10	29.8	22.4	15.2	17.4	31.6	42.0	15.2	23.1	28.8	31.6
16 × 8	29.5	21.7	14.9	17.1	31.1	41.4	14.9	22.7	28.3	31.1
16 × 6	29.1	21.0	14.8	17.0	30.9	41.1	14.8	22.6	28.1	30.9
18 × 16	41.9	31.5	18.5	21.2	38.6	51.3	18.5	28.2	35.1	45.2
18 × 14	41.6	29.8	18.3	21.0	38.1	50.7	18.3	27.8	34.7	44.6
18 × 12	41.2	27.7	18.1	20.7	37.7	50.1	18.1	27.5	34.3	44.1
18 × 10	41.0	27.1	17.9	20.5	37.2	49.5	17.9	27.2	33.9	43.5
18 × 8	40.7	26.5	17.5	20.1	36.5	48.6	17.5	26.7	33.2	42.7

NPS	STD	Sch40	Sch60	XS	Sch80	Sch100	Sch120	Sch140	Sch160	XXS
8 × 3½	4.88	4.88	6.15	7.56	7.56	8.98	10.2	11.4	12.8	12.4
8 × 3	4.82	4.82	6.07	7.47	7.47	8.87	10.0	11.3	12.6	12.2
10 × 8	9.99	9.99	13.7	13.7	16.3	19.7	21.5	25.5	27.7	25.5
10 × 6	9.76	9.76	13.4	13.4	15.9	19.2	21.0	24.9	27.0	24.9
10 × 5	9.53	9.53	13.1	13.1	15.5	18.8	20.5	24.3	26.4	24.3
10 × 4	9.08	9.08	12.4	12.4	14.8	17.9	19.5	23.2	25.2	23.2
10 × 3	9.00	9.00	12.3	12.3	14.7	17.7	19.4	23.0	24.9	23.0
12 × 10	15.4	16.6	23.1	20.5	28.2	32.2	38.2	41.6	48.5	38.2
12 × 8	14.5	15.7	21.8	19.3	26.5	30.3	36.0	39.2	45.7	36.0
12 × 6	14.1	15.2	21.2	18.8	25.8	29.5	35.0	38.1	44.4	35.0
12 × 5	13.6	14.7	20.4	18.1	24.9	28.4	33.7	36.7	42.8	33.7
12 × 4	13.5	14.6	20.3	18.0	24.7	28.2	33.5	36.5	42.5	33.5
14 × 12	27.2	31.8	43.0	36.2	50.6	63.4	73.7	81.6	91.7	-
14 × 10	26.9	31.5	42.5	35.8	50.0	62.7	72.9	80.7	90.7	-
14 × 8	26.6	31.1	42.0	35.4	49.5	62.0	72.1	79.8	89.6	-
14 × 6	26.3	30.8	41.6	35.0	48.9	61.3	71.3	78.9	88.6	-
14 × 5	26.0	30.4	41.1	34.6	48.4	60.6	70.5	78.0	87.6	-
16 × 14	32.2	42.8	56.4	42.8	67.3	82.4	94.0	111	123	-
16 × 12	31.8	42.3	55.7	42.3	66.5	81.4	92.9	110	121	-
16 × 10	31.6	42.0	55.3	42.0	66.0	80.9	92.3	109	121	-
16 × 8	31.1	41.4	54.4	41.4	65.0	79.6	90.8	107	119	-
16 × 6	30.9	41.1	54.1	41.1	64.6	79.1	90.2	107	118	-
18 × 16	38.6	57.9	71.8	51.3	89.9	107	127	145	165	-
18 × 14	38.1	57.2	70.9	50.7	88.8	106	126	143	163	-
18 × 12	37.7	56.6	70.1	50.1	87.8	104	124	141	161	-
18 × 10	37.2	55.8	69.2	49.5	86.7	103	123	140	159	-
18 × 8	36.5	54.8	67.9	48.6	85.1	101	120	137	156	-

Approximate Weights of Buttwelding Fittings - Con&Ecc Reducers

NPS	DIN S3	SGP/LG	Sch5s	Sch10s	Sch40s	Sch80s	Sch5	Sch10	Sch20	Sch30
20 × 18	68.6	47.0	31.2	36.4	56.8	75.5	31.2	41.5	56.8	75.5
20 × 16	68.2	44.7	31.0	36.0	56.3	74.9	31.0	41.1	56.3	74.9
20 × 14	67.9	42.4	30.5	35.5	55.4	73.7	30.5	40.4	55.4	73.7
20 × 12	67.5	40.8	30.0	34.9	54.5	72.5	30.0	39.8	54.5	72.5
20 × 10	67.0	38.5	29.3	34.1	53.3	70.9	29.3	38.9	53.3	70.9
20 × 8	66.3	36.2	28.7	33.4	52.2	69.4	28.7	38.1	52.2	69.4
22 × 20	-	52.1	35.5	41.3	64.5	85.8	35.5	47.1	64.5	85.8
22 × 18	-	49.5	34.5	40.1	62.7	83.4	34.5	45.8	62.7	83.4
22 × 16	-	47.0	32.7	38.1	59.5	79.1	32.7	43.4	59.5	79.1
22 × 14	-	45.3	30.7	35.7	55.8	74.2	30.7	40.7	55.8	74.2
22 × 12	-	-	29.4	34.2	53.5	71.2	29.4	39.1	53.5	71.2
22 × 10	-	-	28.6	33.3	52.0	69.2	28.6	38.0	52.0	69.2
24 × 22	-	57.1	44.8	51.1	70.0	93.1	44.8	51.1	70.0	105
24 × 20	97.0	54.8	43.6	49.7	68.1	90.6	43.6	49.7	68.1	102
24 × 18	96.5	52.6	43.0	49.1	67.2	89.4	43.0	49.1	67.2	101
24 × 16	95.4	50.4	42.1	48.0	65.8	87.5	42.1	48.0	65.8	98.7
24 × 14	94.0	48.5	40.8	46.5	63.7	84.7	40.8	46.5	63.7	95.6
24 × 12	93.0	47.0	39.4	44.9	61.5	81.8	39.4	44.9	61.5	92.3
24 × 10	91.5	-	37.9	43.2	59.2	78.7	37.9	43.2	59.2	88.8
26 × 24	-	74.5	-	-	-	-	-	78.0	125	-
26 × 22	-	71.5	-	-	-	-	-	75.4	121	-
26 × 20	-	68.5	-	-	-	-	-	71.6	115	-
26 × 18	-	66.3	-	-	-	-	-	68.6	110	-
26 × 16	-	80.6	-	-	-	-	-	-	-	-
28 × 26	-	77.5	-	-	-	-	-	84.7	136	170
28 × 24	129	74.5	-	-	-	-	-	81.4	130	164
28 × 22	-	72.4	-	-	-	-	-	79.1	127	159
28 × 20	119	-	-	-	-	-	-	75.0	120	151
28 × 18	110	-	-	-	-	-	-	-	-	-

NPS	STD	Sch40	Sch80	XS	Sch80	Sch100	Sch120	Sch140	Sch160	XXS
20 × 18	56.8	89.7	114	75.5	145	174	204	239	268	-
20 × 16	56.3	89.0	113	74.9	144	173	203	236	266	-
20 × 14	55.4	87.5	111	73.7	142	170	199	233	261	-
20 × 12	54.5	86.1	110	72.5	140	167	196	229	257	-
20 × 10	53.3	84.2	107	70.9	136	164	192	224	252	-
20 × 8	52.2	82.5	105	69.4	134	160	188	219	246	-
22 × 20	64.5	-	140	85.8	180	213	252	290	329	-
22 × 18	62.7	-	136	83.4	175	207	245	282	320	-
22 × 16	59.5	-	129	79.1	166	196	232	268	303	-
22 × 14	55.8	-	121	74.2	156	184	218	251	285	-
22 × 12	53.5	-	116	71.2	149	177	209	241	273	-
22 × 10	52.0	-	113	69.2	145	172	203	234	265	-
24 × 22	70.0	128	168	93.1	211	257	305	347	393	-
24 × 20	68.1	125	163	90.6	206	250	296	337	383	-
24 × 18	67.2	123	161	89.4	203	247	292	333	378	-
24 × 16	65.8	120	158	87.5	199	241	286	326	370	-
24 × 14	63.7	117	153	84.7	192	234	277	315	358	-
24 × 12	61.5	113	148	81.8	186	226	268	304	346	-
24 × 10	59.2	108	142	78.7	179	217	258	293	333	-
26 × 24	94.0	-	-	125	-	-	-	-	-	-
26 × 22	90.8	-	-	121	-	-	-	-	-	-
26 × 20	86.3	-	-	115	-	-	-	-	-	-
26 × 18	82.6	-	-	110	-	-	-	-	-	-
26 × 16		-	-	-	-	-	-	-	-	-
28 × 26	102	-	-	136	-	-	-	-	-	-
28 × 24	98.1	-	-	130	-	-	-	-	-	-
28 × 22	95.3	-	-	127	-	-	-	-	-	-
28 × 20	90.3	-	-	120	-	-	-	-	-	-
28 × 18		-	-	-	-	-	-	-	-	-

Approximate Weights of Buttwelding Fittings - Con&Ecc Reducers

NPS	DIN S3	LG	Sch5s	Sch10s	Sch40s	Sch80s	Sch10	Sch20	Sch30	STD	Sch40	XS
28 × 16	103	-	-	-	-	-	-	-	-	-	-	-
28 × 14	95.0	-	-	-	-	-	-	-	-	-	-	-
28 × 12	90.0	-	-	-	-	-	-	-	-	-	-	-
30 × 28	-	86.6	79.6	99.2	109	145	90.5	145	182	109	-	145
30 × 26	-	83.6	76.7	95.6	105	140	87.2	140	175	105	-	140
30 × 24	-	80.6	74.5	92.8	102	136	84.7	136	170	102	-	136
30 × 22	-	78.5	73.0	91.0	100	133	83.0	133	167	100	-	133
32 × 30	-	92.6	-	-	-	-	97.1	156	195	117	214	156
32 × 28	149	89.6	-	-	-	-	93.8	150	189	113	207	150
32 × 26	-	86.6	-	-	-	-	90.5	145	182	109	199	145
32 × 24	141	84.6	-	-	-	-	88.8	142	179	107	196	142
32 × 20	134	-	-	-	-	-	-	-	-	-	-	-
32 × 18	130	-	-	-	-	-	-	-	-	-	-	-
32 × 16	125	-	-	-	-	-	-	-	-	-	-	-
32 × 14	120	-	-	-	-	-	-	-	-	-	-	-
34 × 32	-	98.7	-	-	-	-	103	165	207	124	227	165
34 × 30	-	95.6	-	-	-	-	100	161	202	121	221	161
34 × 28	-	92.6	-	-	-	-	97.1	156	195	117	214	156
34 × 26	-	90.7	-	-	-	-	93.8	150	189	113	207	150
36 × 34	-	105	-	-	-	-	110	176	220	132	264	176
36 × 32	169	102	-	-	-	-	106	170	214	128	256	170
36 × 30	-	99	-	-	-	-	103	165	207	124	248	165
36 × 28	159	96	-	-	-	-	100	161	202	121	242	161
36 × 26	-	-	-	-	-	-	98.8	158	199	119	238	158
36 × 24	155	-	-	-	-	-	-	-	-	-	-	-
36 × 20	151	-	-	-	-	-	-	-	-	-	-	-
36 × 18	147	-	-	-	-	-	-	-	-	-	-	-
36 × 16	144	-	-	-	-	-	-	-	-	-	-	-
38 × 36	-	112	-	-	-	-	-	-	-	140	-	186
38 × 34	-	108	-	-	-	-	-	-	-	135	-	180
38 × 32	-	105	-	-	-	-	-	-	-	132	-	176
38 × 30	-	103	-	-	-	-	-	-	-	129	-	172
38 × 28	-	-	-	-	-	-	-	-	-	127	-	169
38 × 26	-	-	-	-	-	-	-	-	-	124	-	165
40 × 38	-	117	-	-	-	-	-	-	-	147	-	196
40 × 36	190	114	-	-	-	-	-	-	-	144	-	192
40 × 34	-	111	-	-	-	-	-	-	-	140	-	186
40 × 32	180	109	-	-	-	-	-	-	-	137	-	182
40 × 30	-	-	-	-	-	-	-	-	-	133	-	177
40 × 28	171	-	-	-	-	-	-	-	-	-	-	-
40 × 24	163	-	-	-	-	-	-	-	-	-	-	-
40 × 20	158	-	-	-	-	-	-	-	-	-	-	-
40 × 18	154	-	-	-	-	-	-	-	-	-	-	-
42 × 40	-	123	-	-	-	-	-	-	-	131	-	174
42 × 38	-	120	-	-	-	-	-	-	-	154	-	205
42 × 36	-	117	-	-	-	-	-	-	-	151	-	201
42 × 34	-	115	-	-	-	-	-	-	-	147	-	196
42 × 32	-		-	-	-	-	-	-	-	145	-	193
42 × 30	-		-	-	-	-	-	-	-	142	-	189
44 × 42	-	129	-	-	-	-	-	-	-	163	-	217
44 × 40	-	126	-	-	-	-	-	-	-	158	-	210
44 × 38	-	123	-	-	-	-	-	-	-	154	-	205
44 × 36	-	121	-	-	-	-	-	-	-	152	-	202
46 × 44	-	157	-	-	-	-	-	-	-	198	-	263
46 × 42	-	154	-	-	-	-	-	-	-	194	-	258
46 × 40	-	150	-	-	-	-	-	-	-	189	-	251
46 × 38	-	148	-	-	-	-	-	-	-	185	-	246
48 × 46	-	164	-	-	-	-	-	-	-	207	-	275
48 × 44	-	161	-	-	-	-	-	-	-	203	-	270
48 × 42	-	157	-	-	-	-	-	-	-	198	-	263
48 × 40	255	155	-	-	-	-	-	-	-	194	-	258
48 × 36	242	-	-	-	-	-	-	-	-	-	-	-
48 × 32	233	-	-	-	-	-	-	-	-	-	-	-
48 × 28	226	-	-	-	-	-	-	-	-	-	-	-
48 × 24	220	-	-	-	-	-	-	-	-	-	-	-

Material Specifications for Butt-Welding Fittings (ASTM)

ASTM A234/A234M-00a
Piping Fittings of Wrought Carbon Steel and Alloy Steel for Moderate and High Temperature Service

Grade	Composition, %										
	C	Mn	P	S	Si	Cr	Mo	Ni	Cu	V	Nb
WPB(1)(2)(3)(4)	0.30	0.29-1.06	0.050	0.058	0.10	0.40	0.15	0.40	0.40	0.08	0.02
WPC(1)(2)(3)(4)	0.35	0.29-1.06	0.050	0.058	0.10	0.40	0.15	0.40	0.40	0.08	0.02
WP11 CL1	0.05-0.15	0.30-0.60	0.030	0.030	0.50-1.00	1.00-1.50	0.44-0.65	-	-	-	-
WP11 CL2 WP11 CL3	0.05-0.20	0.30-0.80	0.040	0.040	0.50-1.00	1.00-1.50	0.44-0.65	-	-	-	-

GENERAL NOTE:
All values are maximum unless otherwise indicated.
NOTES:
(1) For each reduction of 0.01% below the specified C maximum, an increase of 0.06%.Mn above the specified maximum will be permitted, up to a maximum of 1.35%.
(2) The sum of Cu, Ni, Cr, and Mo shall not exceed 1.00%.
(3) The sum of Cr and Mo shall not exceed 0.32%.
(4) The maximum carbon equivalent (C.E.) shall be 0.50, based on heat analysis and the formula C.E.=C+Mn/6+(Cr+Mo+V)/5+(Ni+Cu)/15.

Tensile Requirements	WPB	WPC, WP11CL2	WP11CL1	WP11CL3
Tensile Strength, min, ksi[MPa]	60-85	70-95	60-85	75-100
(0.2% offset or 0.5% extension-under-load	[415-585]	[485-655]	[415-585]	[520-690]
Yield Strength, min, ksi[MPa]	32	40	30	45
	[240]	[275]	[205]	[310]

	Wall thickness		Elongation Requirements	
	in	mm	Longitudinal	Transverse
Standard round specimen, or small proportional specimen, min % in 4D			22	14
Rectangular Specimen for wall thickness 0.312in [7.94mm] and over, and for all small sizes tested in full section; min % in 2in[50mm]	> 0.312	> 7.94	30	20
Rectangular Specimen for wall thickness less than 0.312in [7.94mm]; min % in 2 in[50mm] (0.5in [12.7mm] wide specimen)	0.281	7.14	28.5	19
	0.250	6.35	27.0	18
	0.219	5.56	25.5	-
	0.188	4.76	24.0	-
	0.156	3.97	22.5	-
	0.125	3.17	21.0	-
	0.094	2.38	19.5	-
	0.062	1.59	18.0	-

Where the wall thickness lies between two values above, the min elongation value is determined by the following equations:
Longitudinal E=48t+15.00
Transverse E=32t+10.00
E = elongation in 2in[50mm], %
t = actual thickness of specimen, in[mm]

Material Specifications for Butt-Welding Fittings (ASTM)

ASTM A403/A403M-00a
Wrought Austenitic Stainless Steel Piping Fittings

Grade	Composition, %									
	C	Mn	P	S	Si	Ni	Cr	Mo		
WP 304	0.08	2.00	0.045	0.030	1.00	8.0-11.0	18.0-20.0	-		
WP 304L	0.035	2.00	0.045	0.030	1.00	8.0-13.0	18.0-20.0	-		
WP 316	0.08	2.00	0.045	0.030	1.00	10.0-14.0	16.0-18.0	2.00-3.00		
WP 316L	0.035	2.00	0.045	0.030	1.00	10.0-16.0	16.0-18.0	2.00-3.00		

GENERAL NOTE:
All values are maximum unless otherwise indicated.

Tensile and Elongation Requirements		WP304, WP 316	WP304L, WP316L
Yield Strength, min, ksi [MPa]		30[205]	25[170]
Tensile Strength, min, ksi [MPa]		75[515]	70[485]
Elongation (1)	Longitudinal	28	28
	Transverse	20	20

NOTE: (1) Standard round specimen, or small proportional specimen, or strip-type specimen, min % in 4D.

ASTM A420/A420M-00
Piping Fittings of Wrought Carbon Steel and Alloy Steel for Low Temperature Service

Grade	Composition, %										
	C	Mn	P	S	Si	Ni	Cu	Cr	Mo	V	Nb
WPL6(1)(2)	0.30	0.60-1.35	0.035	0.040	0.15-0.30	0.40	0.40	0.30	0.12	0.08	0.02
WPL9	0.20	0.40-1.06	0.030	0.030	-	1.60-2.24	0.75-1.25				

GENERAL NOTE:
All values are maximum unless otherwise indicated.
NOTES:
(1) For each reduction of 0.01% C below 0.30%, an increase of 0.05% Mn above 1.06% will be permitted to a maximum of 1.35%.
(2) Fittings made from forgings may have 1.35% max Mn.

Tensile Requirements	WPL6	WPL9
Tensile Strength, min, ksi [MPa]	60-85[415-585]	63-88[435-610]
Yield Strength, min, ksi [MPa]	35[240]	46[315]

	Wall thickness		Elongation Requirements			
			Longitudinal		Transverse	
	in	mm	WPL6	WPL9	WPL6	WPL9
Standard round specimen, or small proportional specimen, min % in 4D			22	20	12	-
Rectangular Specimen for wall thickness 0.312in [7.94mm] and over, and for all small sizes tested in full section; min % in 2in[50mm]	> 0.312	> 7.94	30	28	16.5	18
Rectangular Specimen for wall thickness less than 0.312in [7.94mm]; min % in 2 in[50mm] (0.5in [12.7mm] wide specimen)	0.281	7.14	28.5	26.5	15.5	17.0
	0.250	6.35	27.0	25.0	14.5	16.0
	0.219	5.56	25.5	23.5	-	-
	0.188	4.76	24.0	22.0	-	-
	0.156	3.97	22.5	20.5	-	-
	0.125	3.17	21.0	19.0	-	-
	0.094	2.38	19.5	17.5	-	-
	0.062	1.59	18.0	16.0	-	-

Where the wall thickness lies between two values above, the min elongation value is determined by the following equations:

	WPL6	WPL9
Longitudinal	E=48t+15.00	E=48t+13.00
Transverse	E=32t+6.50	E=32t+8.00

E = elongation in 2in[50mm], %
t = actual thickness of specimen, in[mm]

Material Specifications for Butt-Welding Fittings (JIS and DIN)

JIS B2311 Steel Butt-Welding Pipe Fittings for Ordinary Use
JIS G3452 Carbon Steel Pipes for Ordinary Piping
JIS G3457 Arc Welded Carbon Steel Pipes

Steel Grade	Chemical Composition %			Tensile Strength	Yield Point	Elongation % (1)	
	C	P	S			Longitudinal	Transverse
	Max			N/mm2 Min		Min	Min
SGP	-	0.040	0.040	290	-	30 (2)	25 (2)
PY400	0.25	0.040	0.040	400	255	-	18

NOTES:
(1) Values specified are for wall thickness 8mm and over. For each 1mm decrease in wall thickness below 8mm, a deduction of 1.5% for both longitudinal and transverse from the values shown above is permitted.
(2) Values not applicable to NPS below 32A.

DIN 1626 Welded Circular Unalloyed Steel Tubes Subject to Special Requirements
DIN 1629 Seamless Circular Unalloyed Steel Tubes Subject to Special Requirements
DIN 17175 Seamless Tubes of Heat-Resistant Steels

Steel Grade Symbol	Type of deoxidiz -ation	Chemical Composition (cast analysis) % (max unless otherwise specified)					
		C	Si (1)	Mn	P	S	N (2)
St 37.0	R	0.17	-	-	0.040	0.040	0.009 (2)
St 35.8	-	0.17	0.10-0.35	0.40-0.80	0.040	0.040	-

NOTES:
(1) The minimum Si content is allowed to fall below 0.10%, when the steel is aluminium-killed or vacuum-deoxidized.
(2) A content in excess of the maximum value stated is permitted if a P content less than the maximum specified by 0.005% P per 0.001% N is observed. However the N content shall not exceed a value of 0.012% in the case analysis and 0.014% in the product analysis.
(3) The specified value does not apply if the steels are supplied with the RR (instead of R) type of deoxidization.
R=killed, including semi-killed
RR= fully killed

Amounts by which the chemical composition in the product/sample analysis may deviate from the limiting values applicable to the cast analysis.

Element	St 37.0 Allowable Deviation Amount %	St 35.8	
		Limits Quoted in Cast Analysis	Allowable Deviation Amount (2) %
C	0.02	≤ 0.24	± 0.02
Si	-	≤ 0.35	± 0.03
Mn	-	≤ 1.00	± 0.04
P	0.010	≤ 0.040	± 0.010
S	0.010	≤ 0.040	± 0.010
N	0.001(1)	-	-

NOTES:
(1) A content in excess of the maximum value stated is permitted if a P content less than the maximum specified by 0.005% P per 0.001% N is observed. However the N content shall not exceed a value of 0.012% in the case analysis and 0.014% in the product analysis (this does not apply to the RR type of deoxidization).
(2) In a cast the deviation of an element in a sample analysis is permitted to be below the minimum value or only above the maximum value of the range stipulated for the cast analysis, though not both at the same time.

Steel Grade Symbol	Upper Yield Stress ReH for Wall thicknesses, in mm			Tensile Strength Rm	Elongation after Fracture A5		Impact Strength Transverse
	ReH ≤ 16	16<ReH ≤ 40	40<ReH ≤ 60		Longitudinal	Transverse	
	Min N/mm2				Min %		Min J
St 37.0	235	225	215	350 (1) -480	25	23	-
St 35.8	235	225	215	360-480	25	23	34

NOTE:
(1) For cold finished tubes in the NBK condition, minimum values of tensile strength lower than this value by 10N/mm2 is permitted.

Comparison Table - International Steel Specifications and Grades

ASTM				JIS		DIN
Fitting	Pipe	Plate	Forging	Pipe	Plate	Pipe
-	A53-F	-	-	SGP	SS41	2440/2441 ST33.2
-	A134/A139-B	-	-	STPY400		1625 ST37
-	A135-A	-	-	STPG38	SM41B	1626 ST37
-	A587	-	-	STPG38		1629 ST37
-	A106-A	A285-B	A105	STPT38	SB42	17175 ST35.8
WPB	A106-B	A515-65or70	A105	STPT42	SB42	17175 ST45.8
WPC	A106-C	-	-	STPT49	SB49	-
WPL6	A333/334-6	A515-60	A350-LF2	STPL39	-	-
WPL3	A333/334-3	A203-D	A350-LF3	STPL45	-	-
WP1	A335-P1	A204-B	A182-F1	STPA12	-	17175-15Mo3
WP12	A335-P12	A387-12	A182-F12	STPA22	-	17175-15Mo3
WP11	A335-P11	A387-11	A182-F11	STPA23	-	-
WP22	A335-P22	A387-22	A182-F22	STPA24	-	17175-10CrMo910
WP5	A335-P5	A387-5	A182-F5	STPA25	-	-
WP7	A335-P7	-	A182-F7	-	-	-
WP9	A335-P9	-	A182-F9	STPA26	-	-
WP304	A312-TP304	A240-304	A182-F304	SUS304TP	SUS304	17440-X5CrNi189
WP304H	A312-TP304H	A240-304H	A182-F304H	SUS304HTP	-	-
WP304L	A312-TP304L	A240-304L	A182-F304L	SUS304LTP	SUS304L	17440-X2CrNi189
WP309	A312-TP309	A240-309S	-	SUS309STP	SUS309S	-
WP310	A312-TP310	A240-310S	A182-F310	SUS310STP	SUS310S	-
WP347	A312-TP347	A240-347	A182-F347	SUS347TP	SUS347	17440-X5CrNiNb189
WP316	A312-TP316	A240-316	A182-F316	SUS316TP	SUS316	17440-X5CrNiMo1810
WP316H	A312-TP316H	A240-316H	A182-F316H	SUS316HTP	-	-
WP316L	A312-TP316L	A240-316L	A182-F316L	SUS316LTP	SUS316L	17440-X2CrNiMo1810
WP321	A312-TP321	A240-321	A182-F321	SUS321TP	SUS321	17440-X10CrNiTI189
WP321H	A312-TP321H	A240-321H	A182-F321H	SUS321HTP	-	-
WP347H	A312-TP347H	A240-347H	A182-F347H	SUS347HTP	-	-