WISE®

FLOW ELEMENT

FLOW ELEMENT	MODEL	CAT. NO
Orifice Assembly Unit	WOP, WOR, WOJ, WFH	FD01-01
Venturi Tube	WVT	FD01-02
Flow Nozzle	WFN	FD01-03
Technical Data		FD09-01

model : WOP

Orifice plates are widely used for flow measurement as they provide the simplest and the most economical means of flow detection. Orifice plates are available in the concentric type that the round opening (bore) of the orifice plate is positioned concentrically with the center of the pipe; and the opening edge (bore edge) is available either in the concentric square edge type (sharp, square edge type) or in the quardrant edge type (round edge type). Orifice plates are also available in the eccentric type that the opening of the orifice is shifted from the center of the pipe. They also are available in the segmental type that the opening is a circular segmental segment and the orifice is comparable to a partically opened gate valve.

● CONCENTRIC

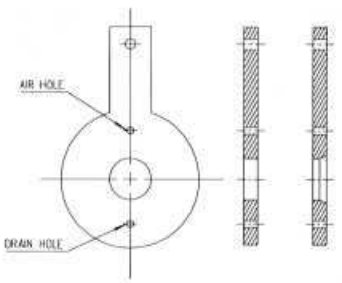

● ECCENTRIC

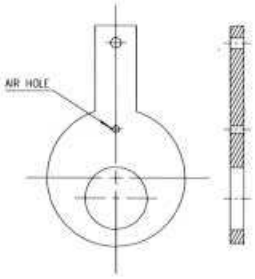

● SEGMENTAL

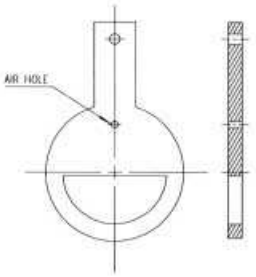

● QUADRANT

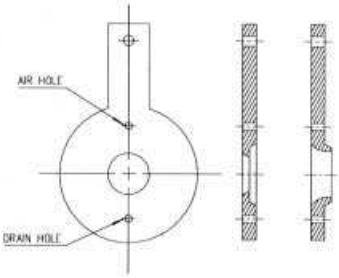

■ SPECIFICATION

Concentric Square Edged Orifices
Quadrant Edged Orifices
Eccentric Orifice
Segmental Orifices

ISO 5167
AGA report #3
ASME 3M (R.W Miller)
L.K. Spink

JIS 2, 5, 10, 16, 20, 30, 40 and 63kg/Cm²
ANSI Class 150, 300, 600 and 900, 1500, 2500

Flange taps
Corner taps
Vena contracta taps
1D and 1/2D (Radius) pipe taps
2, 3, 4, 5, 6, 9, 10, 12 mm
Welded to orifice plate

Standard: 304SS, 316SS
Non-Standard: 316LSS, monel, hastelloy B,C. etc.

Per ASME recommendations.
Not drilled for orifice bores smaller than 25.4mm.

Upstream side of tab handle stamped "UPSTREAM" and with bore type and size, line size, tag number, quadrant edge radius and flange rating. Downstream side of tab handle stamped with orifice material and serial number.

Special marking may be furnished to meet specific requirements.

■ ORIFICE PLATE APPLICATION SUMMARY

Orifice Type	Fluid Type					Nominal Line Size Normally Used	
	Gas (Vapor)		Liquid				
	Clean	Dirty	Clean	Dirty	Viscous	mm	in
Concentric-Square Edge	E	X	E	O	X	15 to 1500	1/2 to 60
Concentric-Quadrant Edge	X	X	E	O	E	25 to 250	1 to 10
Eccentric-Square Edge	O	E	O	E	X	100 to 350	4 to 14
Segmental-Square Edge	O	E	O	E	X	100 to 350	4 to 14

Notes: E : Designed for this application
O : Normally applicable for this application
X : Not designed for this application

Orifice Plate

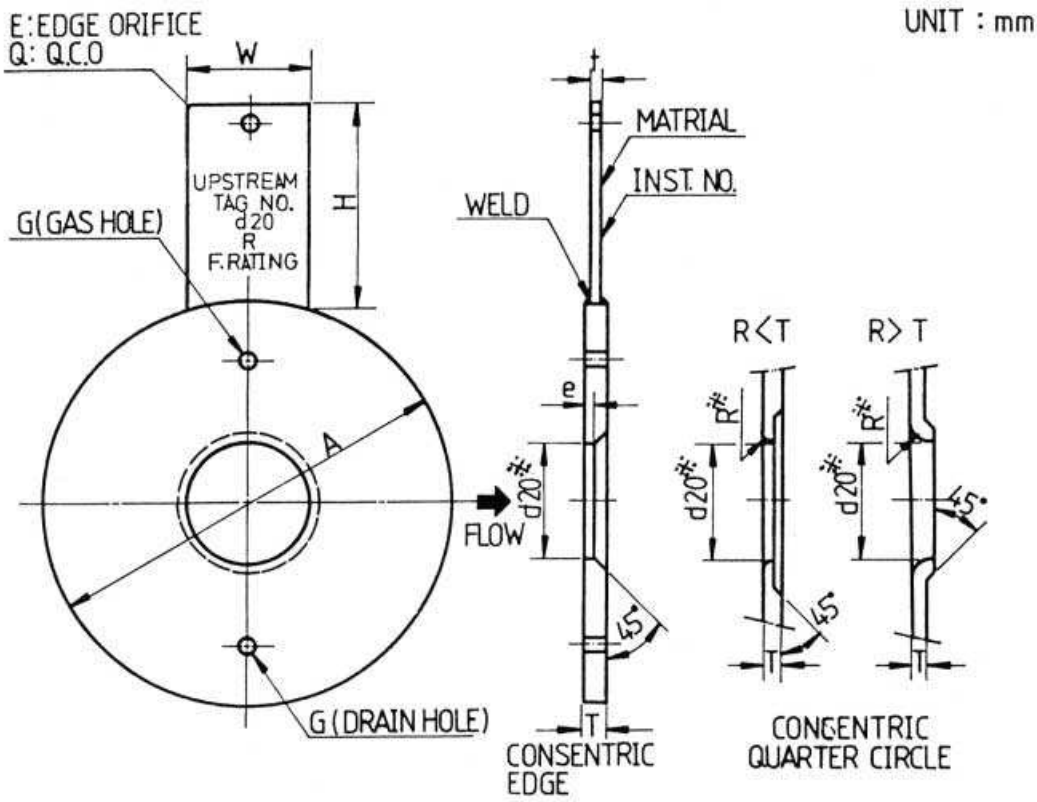

■ DIMENSIONS (in inches) *For ANSI Flanges*

Nominal Pipe Size		Outside Diam of Plate(A)							Thickness of Edge (e)	Thickness of Plate (T)	Tap Handle		
mm	inch	125Lbs. and 150Lbs.	250Lbs. and 300Lbs.	400Lbs. AISI	600Lbs. AISI	900Lbs. AISI	1500 Lbs. AISI	2500 Lbs. AISI			Width (W)	High (H)	Thickness (t)
15	1/2	1 7/8	2 1/2	2 1/8	2 1/8	2 1/8	2 1/2	2 5/8		1/8	4	1	1/8
20	3/4	2 1/4	2 5/8	2 5/8	2 5/8	2 5/8	2 3/4	3		1/8	4	1	1/8
25	1	2 5/8	2 7/8	2 5/8	2 7/8	3 1/4	3 1/4	3 5/8		1/8	4	1	1/8
32	1 1/4	3	3 1/4	3 1/4	3 1/4	3 1/2	3 1/2	4 1/8		1/8	4	1	1/8
40	1 1/2	3 1/8	3 5/8	3 5/8	3 1/4	3 5/8	3 5/8	4 5/8		1/8	4	1	1/8
50	2	4 1/8	4 7/8	4 7/8	4 7/8	5 1/4	5 1/8	5 3/4		1/8	4	1	1/8
65	2 1/2	4 7/8	5 1/8	5 1/8	5 1/8	6 1/2	6 1/2	6 5/8		1/8	4	1 1/4	1/8
80	3	5 5/8	5 7/8	5 7/8	5 7/8	6 5/8	6 5/8	7 5/8		1/8	4	1 1/4	1/8
100	4	6 7/8	7 1/8	7	7 5/8	8 1/4	8 1/4	9 1/4		1/8	4	1 1/4	1/8
125	5	7 7/8	8 1/2	8 5/8	9 1/2	9 3/4	10	11		1/8	5	1 1/2	1/8
150	6	8 7/8	9 5/8	9 5/8	10 1/2	11 3/4	11 5/8	12 1/2		1/8	5	1 1/2	1/8
200	8	11	12 1/8	12	12 5/8	14 1/8	13 7/8	15 1/4		1/8	5	1 1/2	1/8
250		10	13 5/8	14 1/4	15 3/4	17 1/8	17 1/8	18 5/8		1/8	6	1 1/2	1/8
300	12	16 1/8	16 1/8	16 1/2	18	19 5/8	20 1/2	21 5/8		1/8	6	1 1/2	1/8
350	14	17 3/4	19 1/8	19	19 3/8	20 1/2	22 3/4	—		1/8	6	1 1/2	1/8
400	16	20 1/4	21 1/8	21 1/8	22 1/4	22 5/8	25 1/4	—		3/16	6	1 1/2	1/8
450	18	21 1/2	23 5/8	23 1/4	24	25	27 3/8	—		3/16	6	1 1/2	1/8
500	20	23 3/4	25 5/8	25 5/8	26 3/4	27 3/8	29 5/8	—		3/16	6	1 1/2	1/8
550	22	26	27 3/4	27 1/2	27 7/8	—	—	—		3/16	6	1 1/2	1/8
600	24	28 1/8	30 3/8	30 1/8	31	32 1/8	35 1/2	—		3/16	6	1 1/2	1/8
750	30	34 3/8	37 1/8	37 1/4	38 1/8	—	—	—		1/2	6	1 1/2	1/8
900	36	41 1/4	43 3/8	43 7/8	44 3/8	—	—	—		1/2	8	1 1/2	1/8

■ DIMENSIONS (mm) *For K.S and JIS Flanges*

Nominal Pipe Size		Outside Diam of Plate(A)						Thickness of Edge (e)	Thickness of Edge (T)	Tap Handle		
mm	inch	2K, 3K	10K	20K	30K	40K	63K			Width (W)	High (H)	Thickness (t)
15	1/2	50	58	58	64	64	69	0.2 - 0.3	2	25	9.5	2
20	3/4	55	63	63	69	69	75	0.2 - 0.4	2	25	9.5	2
25	1	63	71	71	76	76	77	0.2 - 0.4	2	25	9.5	2
32	1 1/4	75	81	81	86	86	87	0.3 - 0.5	2	25	9.5	2
40	1 1/2	80	86	86	97	97	105	0.3 - 0.5	2	25	9.5	2
50	2	90	101	101	111	111	122	0.5 - 0.8	2	25	9.5	2
65	2 1/2	115	121	121	137	137	150	0.5 - 0.8	3	32	9.5	2
80	3	126	131	137	147	147	160	0.5 - 0.8	3	32	9.5	2
100	4	146	156	162	170	180	193	0.8 - 1.2	3	38	10.5	2
125	5	181	187	200	205	223	232	0.8 - 1.2	3	38	10.5	2
150	6	211	217	235	248	262	272	0.8 - 1.2	3	38	10.5	2
200	8	257	267	280	293	312	327	1.5 - 2.0	4	38	10.5	2
250	10	322	330	353	357	377	391	4	4	44	12.0	3
300	12	367	375	403	417	431	446	4	4	44	12.0	3
350	14	410	420	447	462	476	484	4	4	44	12.0	3
400	16	470	483	507	521	531	544	4	4	44	12.0	3
450	18	532	538	572				5	5	44	16.0	5
500	20	582	593	627				5	5	60	16.0	5
550	22	640	647	681				5	5	60	16.0	5
600	24	690	697	731				5	5	60	16.0	5
750	30	853	867					8	5	60	16.0	6
900	36	1003	1017					8	8	60	18.0	8

model : WOR Orifice Plate With Ring

Orifice Ring Assemblies are used for flow measurement of smaller or medium sized pipes at lower pressures. Each assembly consists of one orifice plate and two orifice rings. Differential pressures are taken out in a corner tap system.

Orifice Blocks, which are of a unit-construction type and provide higher pressure ratings than the Orifice Ring Assemblies, also are available. Differential pressures are taken out in a corner tap system.

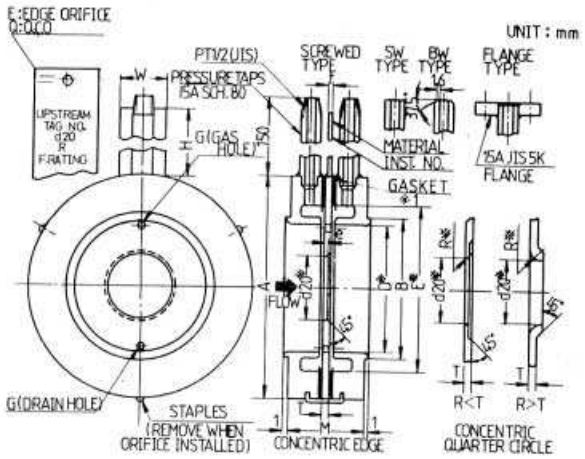

■ SPECIFICATION

Concentric Square Edged Orifices
Quadrant Edged Orifices.
Minimum quadrant edged orifice diameter 4.5mm
Minimum quadrant edged radius 0.5mm

ISO 5167
AGA 3, 8
General Application
L.K. Spink

JIS 5, 10, 16, 20kg/Cm²
ANSI (or JPI) 150 lb
(Note: ANSI and JPI ring dimensions are identical)

Corner taps
2, 3, 4, 5, 6, 9, 10 mm
Welded to orifice plate
15mm (1/2 inch) Sch 80

Length: 150mm
Tap Connections: PT 1/2 or 1/2 NPT male, socket weld, butt weld or flange. (Flange rating to be the same as the of the process pipeline)

Per ASME recommendations. Not drilled for orifice bores smaller than 25.4mm

Upstream side of tab handle stamped "UP-STREAM" and with bore type and size, line size, tag number, quadrant edge radius and flange rating. Downstream side of tab handle stamped with orifice material and serial number.

Special markings may be furnished to meet specific requirements.

Ring and Pressure Tap Nipple: C.S. 304SS, 316SS
Plate: 304SS, 316SS, 316L, monel, other
Tab Handle: 304SS, 316SS

Material: Asbestos
Thickness: 1.5mm

Orifice Plate With Ring

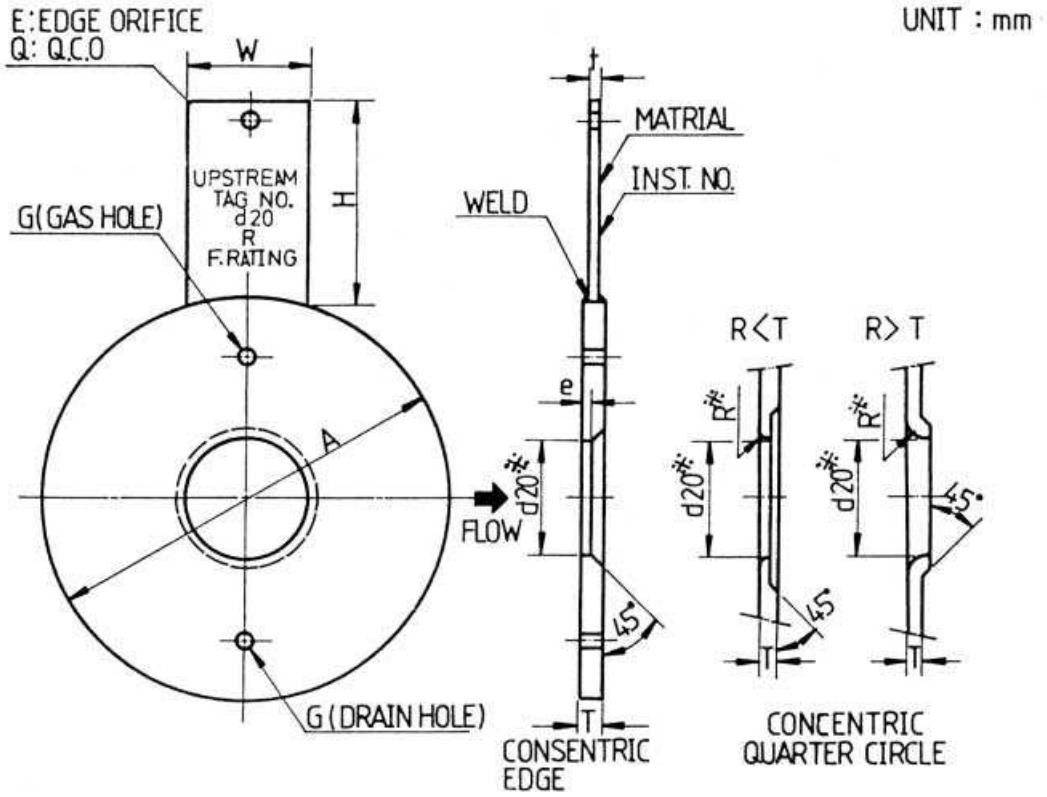

■ DIMENSIONS (mm) *For ANSI 150 # Flanges*

Nominal Pipe Size	Outside Diam of Rings and Plate A	Diam of Gasket Stay B	Thickness of Edge e	Diam of Hole G	Face to Face M	Thickness of Plate T	Width of Tab Handle W	High of Tab Handle H	Thickness of Tab Handle I
1/2	—	—	—	—	—	—	—	—	—
3/4	—	—	—	—	—	—	—	—	—
1	66.7	33	0.2 - 0.4	—	75	2	25	95	2
1 1/4	76.2	42	0.3 - 0.5	1.6	75	2	25	95	2
1 1/2	85.7	48	0.3 - 0.5	1.6	75	2	25	95	2
2	104.8	60	0.5 - 0.8	1.6	75	2	25	95	2
2 1/2	123.8	73	0.5 - 0.8	1.6	75	3	32	95	2
3	136.5	88	0.5 - 0.8	1.6	75	3	32	95	2
3 1/2	161.9	101	0.5 - 0.8	1.6	75	3	32	95	2
4	174.6	114	0.8 - 1.2	1.6	75	3	38	105	2
5	198.9	141	0.8 - 1.2	1.6	75	3	38	105	2
6	222.3	168	0.8 - 1.2	1.6	75	3	38	105	2
8	279.4	219	1.5 - 2.0	1.6	76	4	38	105	2
10	339.7	273	e - T	2.0	76	4	44	120	3
12	409.6	323	e - T	2.5	76	4	44	120	3

■ DIMENSIONS (mm) *For JIS Flanges*

Nominal Pipe Size	Outside of Diam Ring and Plate A			Diam of Gasket Stay B	Thickness of Edge e	Diam of Hold G	Face of Face H	Thickness of Plate T	Width of Tab Handle W	Hight of Tab Handle H	Thickness of Tab Handle I
	5K	10K	16/20K								
15	—	58	58	21	0.2 - 0.3	—	75	2	25	95	2
20	—	63	63	27	0.2 - 0.4	—	75	2	25	95	2
25	65	74	74	33	0.2 - 0.4	—	75	2	25	95	2
32	78	84	84	42	0.3 - 0.3	1.6	75	2	25	95	2
40	83	89	89	48	0.3 - 0.5	1.6	75	2	25	95	2
50	93	104	104	60	0.5 - 0.8	1.6	75	2	25	95	2
65	118	124	124	73	0.5 - 0.8	1.6	75	3	32	95	2
80	129	134	140	88	0.5 - 0.8	1.6	75	3	32	95	2
90	139	144	150	101	0.5 - 0.8	1.6	75	3	32	95	2
100	149	159	165	114	0.8 - 1.2	1.6	75	3	38	105	2
125	184	190	203	141	0.8 - 1.2	1.6	75	3	38	105	2
150	214	220	238	168	0.8 - 1.2	1.6	75	3	38	105	2
200	260	270	283	219	1.5 - 2.0	1.6	76	4	38	105	2
250	325	333	356	273	e - T	2.0	76	4	44	120	3
300	370	378	406	323	e - T	2.5	76	4	44	120	3

model : WOJ Orifice Plate With Holding Ring

Model: WOJ

The Holder Ring Assembly is a combination of a holder ring and an orifice plate designed for ring-type-joint(RTJ) flanges of ANSI or JPI Specifications. The holder ring has a function of holding the orifice plate and also a function as a gasket to prevent leakage of the process fluid. This metallic sealing system is applicable to a fluid of high temperature and high pressure. The pressure tapping system normally is of the flange tap type.

UNIT : mm

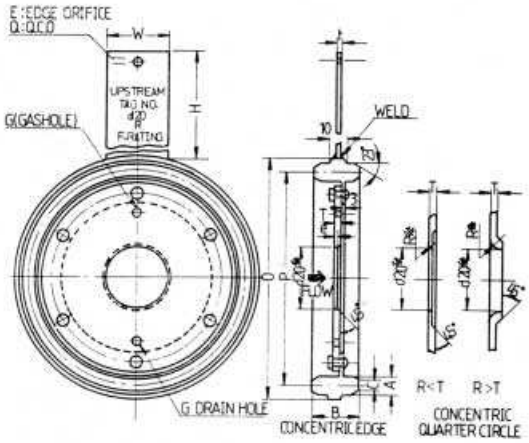

■ SPECIFICATION

Concentric Square Edged Orifices
Quadrant Edged Orifices

ISO5167
AGA 3,8
General Application
L.K. Spink

ANSI 300, 600, 900, and 1500lb. ring joint (RJ)
Flange taps
2, 3, 4, 5, 6, 8 mm
Welding to ring
Riveted to plate
Types: Octagonal or oval

Per ASME recommendations. Not drilled for orifice bores smaller than 25.4mm

Upstream side of tab handle stamped with "UP-STREAM" and with bore type and size, line size, tag number, quadrant edge radius and flange rating. DOWN STREAM side of tab handle stamped with orifice and ring material, and serial number.

Special markings may be furnished to meet specific requirements.

Plate: 304SS, 316SS, 316L
Holding Ring: Carbon steel,
304 or 316 stainless steel
Rivets: 304 or 316 stainless steel
Tab: Handle: 304 or 316 stainless steel

Orifice Bore Type	Pipe Sizes	Pipe Diameter Given in the Applicable Standards
Concentric Square Edge	1½ inches to 14 inches	50 to 760 mm
Quadrant Edge	1½ inches to 6 inches	25 to 150 mm

Orifice Plate With Holding Ring

■ FOR ANSI 300 (OVAL TYPE)

Nominal Pipe Size	Holding Ring				Thickness of Edge e	Diam of Hole G	THickness of Plate T	Tab Handle		
	Outside Diam O	Pitch Diam P	Width A	Hight B				Width W	Hight H	Thickness t
11/2	82	68.26	7.94	25.0	0.3-0.5	1.6	2	25	95	2
2	100	82.55	11.11	26.6	0.5-0.8	1.6	2	25	95	2
21/2	119	101.60	11.11	27.6	0.5-0.8	1.6	3	32	95	2
3	141	123.83	11.11	27.6	0.5-0.8	1.6	3	32	95	2
31/2	149	131.76	11.11	27.6	0.5-0.8	1.6	3	32	95	2
4	166	149.23	11.11	27.6	0.8-1.2	1.6	3	38	125	2
5	198	180.98	11.11	27.6	0.8-1.2	1.6	3	38	125	2
8	287	269.88	11.11	28.6	1.5-2.0	1.6	4	38	125	2
10	341	323.85	11.11	28.6	e=T	2.0	4	44	160	3
12	398	381.00	11.11	28.6	e=T	2.5	4	44	160	3
14	436	419.10	11.11	28.6	e=T	2.5	4	44	160	3

■ FOR ANSI 600 (OVAL TYPE)

Nominal Pipe Size	Holding Ring				Thickness of Edge e	Diam of Hole G	THickness of Plate T	Tab Handle		
	Outside Diam O	Pitch Diam P	Width A	Hight B				Width W	Hight H	Thickness t
11/2	82	68.26	7.94	25.0	0.3-0.5	1.6	2	25	95	2
2	100	82.55	11.11	27.4	0.5-0.8	1.6	2	25	95	2
21/2	119	101.60	11.11	28.4	0.5-0.8	1.6	3	32	95	2
3	141	123.83	11.11	28.4	0.5-0.8	1.6	3	32	95	2
31/2	149	131.76	11.11	28.4	0.5-0.8	1.6	3	32	95	2
4	166	149.23	11.11	28.4	0.8-1.2	1.6	3	38	125	2
5	198	180.98	11.11	28.4	0.8-1.2	1.6	3	38	125	2
6	228	211.14	11.11	28.4	0.8-1.2	1.6	3	38	125	2
8	287	269.88	11.11	29.4	1.5-2.0	1.6	4	38	125	2
10	341	323.85	11.11	29.4	e=T	2.0	4	44	160	3
12	398	381.00	11.11	29.4	e=T	2.5	4	44	160	3
14	436	419.00	11.11	29.4	e=T	2.5	4	44	160	3

■ FOR ANSI 900 (OVAL TYPE)

Nominal Pipe Size	Holding Ring				Thickness of Edge e	Diam of Hole G	THickness of Plate T	Tab Handle		
	Outside Diam O	Pitch Diam P	Width A	Hight B				Width W	Hight H	Thickness t
11/2	82	68.26	7.94	25.0	0.3-0.5	1.6	2	25	110	2
2	112	95.25	11.11	29.0	0.5-0.8	1.6	2	25	110	2
21/2	125	107.95	11.11	30.0	0.5-0.8	1.6	3	32	120	2
3	141	123.83	11.11	29.2	0.5-0.8	1.6	3	32	120	2
4	166	149.23	11.11	29.2	0.8-1.2	1.6	3	38	125	2
5	198	180.98	11.11	29.2	0.8-1.2	1.6	3	38	150	2
6	228	211.14	11.11	29.2	0.8-1.2	1.6	3	38	150	2
8	287	269.88	11.11	30.2	1.5-2.0	1.6	4	38	150	2
10	341	323.85	11.11	30.2	e=T	2.0	4	44	160	3
12	398	381.00	11.11	30.2	e=T	2.5	4	44	160	3
14	441	419.10	15.88	34.9	e=T	2.5	4	44	160	3

■ FOR ANSI 1500 (OVAL TYPE)

Nominal Pipe Size	Holding Ring				Thickness of Edge e	Diam of Hole G	THickness of Plate T	Tab Handle		
	Outside Diam O	Pitch Diam P	Width A	Hight B				Width W	Hight H	Thickness t
11/2	82	68.26	7.94	25.0	0.3-0.5	1.6	2	25	110	2
2	112	95.25	11.11	29.0	0.5-0.8	1.6	2	25	110	2
21/2	125	107.95	11.11	30.0	0.5-0.8	1.6	3	32	120	2
3	154	136.53	11.11	30.0	0.5-0.8	1.6	3	32	120	2
4	179	161.93	11.11	30.0	0.8-1.2	1.6	3	38	125	2
5	211	193.68	11.11	30.0	0.8-1.2	1.6	3	38	150	2
6	230	211.14	12.70	31.6	0.8-1.2	1.6	3	38	150	2
8	292	269.88	15.88	34.9	1.5-2.0	1.1	4	38	150	2
10	346	323.85	15.88	34.9	e=T	2.0	4	44	190	3
12	409	381.00	22.22	40.5	e=T	2.5	4	44	190	3
14	451	419.10	25.40	44.4	e=T	2.5	4	44	220	3

■ FOR ANSI 300 (OCTAGONAL TYPE)

Nominal Pipe Size	Holding					Thickness of Edge e	Diam of Hole G	Thickness of Plate T	Tab Handle		
	Outside Diam O	Pitch Diam P	width A	Hight B	Width on Flat C				Width W	High H	Thickness t
11/2	82	68.26	7.94	23.4	5.23	0.3-0.5	1.6	2	25	95	2
2	100	82.55	11.11	25.0	7.75	0.5-0.8	1.6	2	25	95	2
21/2	119	101.60	11.11	26.0	7.75	0.5-0.8	1.6	3	32	95	2
3	141	123.83	11.11	26.0	7.75	0.5-0.8	1.6	3	32	95	2
31/2	149	131.76	11.11	26.0	7.75	0.5-0.8	1.6	3	32	95	2
4	166	149.23	11.11	26.0	7.75	0.8-1.2	1.6	3	38	125	2
5	198	180.98	11.11	26.0	7.75	0.8-1.2	1.6	3	38	125	2
6	228	211.14	11.11	26.0	7.75	0.8-1.2	1.6	3	38	125	2
8	287	269.88	11.11	27.0	7.75	1.5-2.0	1.6	4	38	125	2
10	341	323.85	11.11	27.0	7.75	e=T	2.0	4	44	160	3
12	398	381.00	11.11	27.0	7.75	e=T	2.5	4	44	160	3
14	436	419.10	11.11	27.0	7.75	e=T	2.5	4	44	160	3

■ FOR ANSI 600 (OCTAGONAL TYPE)

Nominal Pipe Size	Holding Ring					Thickness of Edge e	Diam of Hole G	Thickness of Plate T	Tab Handle		
	Ouside Diam O	Pitch Diam P	Width A	Hight B	Width of Flat C				Width W	Hight H	Thickness t
11/2	82	68.26	7.94	23.4	5.23	0.3-0.5	1.6	2	25	95	2
2	100	8.255	11.11	25.8	7.75	0.5-0.8	1.6	2	25	95	2
21/2	119	101.60	11.11	26.8	7.75	0.5-0.8	1.6	3	32	95	2
3	141	123.83	11.11	26.8	7.75	0.5-0.8	1.6	3	32	95	2
31/2	149	131.76	11.11	26.8	7.75	0.5-0.8	1.6	3	32	95	2
4	166	149.23	11.11	26.8	7.75	0.8-1.2	1.6	3	38	125	2
5	198	180.98	11.11	26.8	7.75	0.8-1.2	1.6	3	38	125	2
6	228	211.14	11.11	26.8	7.75	0.8-1.2	1.6	3	38	125	2
8	287	269.88	11.11	27.8	7.75	1.5-2.0	1.6	4	38	125	2
10	341	323.85	11.11	27.8	7.75	e=T	2.0	4	44	160	3
12	398	381.00	11.11	27.8	7.75	e=T	2.5	4	44	160	3
14	436	419.10	11.11	27.8	7.75	e=T	2.5	4	44	160	3

■ FOR ANSI 900 (OCTAGONAL TYPE)

Nominal Pipe Size	Holding Ring					Thickness of Edge e	Diam of Hole G	Thickness of Plate T	Tab Handle		
	Ouside Diam O	Pitch Diam P	Width A	Hight B	Width of Flat C				Width W	Hight H	Thickness t
11/2	82	68.26	7.94	23.4	5.23	0.3-0.5	1.6	2	25	110	2
2	112	95.25	11.11	27.4	7.75	0.5-0.8	1.6	2	25	110	2
21/2	125	107.95	11.11	28.4	7.75	0.5-0.8	1.6	3	32	120	2
3	141	123.83	11.11	27.6	7.75	0.5-0.8	1.6	3	32	120	2
4	166	149.23	11.11	27.6	7.75	0.8-1.2	1.6	3	38	125	2
5	198	180.98	11.11	27.6	7.75	0.8-1.2	1.6	3	38	150	2
6	228	211.14	11.11	27.6	7.75	1.5-2.0	1.6	4	38	150	2
8	287	269.88	11.11	28.6	7.75	1.5-2.0	1.6	4	38	150	2
10	341	323.85	11.11	28.6	7.75	e=T	2.0	4	44	160	3
12	398	381.00	11.11	28.6	7.75	e=T	2.5	4	44	160	3
14	441	419.10	15.88	33.3	10.49	e=T	2.5	4	44	160	3

■ FOR ANSI 1500 (OCTAGONAL TYPE)

Nominal Pipe Size	Holding Ring					Thickness of Edge e	Diam of Hole G	Thickness of Plate T	Tab Handle		
	Ouside Diam O	Pitch Diam P	Width A	Hight B	Width of Flat C				Width W	Hight H	Thickness t
11/2	82	68.26	7.94	23.4	5.23	0.3-0.5	1.6	2	25	110	2
2	112	95.25	11.11	27.4	7.75	0.5-0.8	1.6	2	25	110	2
21/2	125	107.95	11.11	28.4	7.75	0.5-0.8	1.6	3	32	120	2
3	154	136.53	11.11	28.4	7.75	0.5-0.8	1.6	3	32	120	2
4	179	161.93	11.11	28.4	7.75	0.8-1.2	1.6	3	38	125	2
5	211	193.68	11.11	28.4	7.75	0.8-1.2	1.6	3	38	150	2
6	230	211.14	1.270	30.0	8.66	0.8-1.2	1.6	3	38	150	2
8	292	269.88	15.88	33.3	10.49	1.5-2.0	1.6	4	38	150	2
10	346	323.85	15.88	33.3	10.49	e=T	2.0	4	44	190	3
12	409	381.00	22.22	38.9	14.81	e=T	2.5	4	44	190	3
14	451	419.10	25.40	42.9	17.30	e=T	2.5	4	44	220	3

model : WFH Orifice Plate With Holding Ring

Orifice Flange Assemblies are used in conjunction with Orifice Plates for flow measurement of smaller or medium size pipes at lower or medium pressure ranges. The flange connection is an RF type and the differential pressure tapping system is the flange taps.

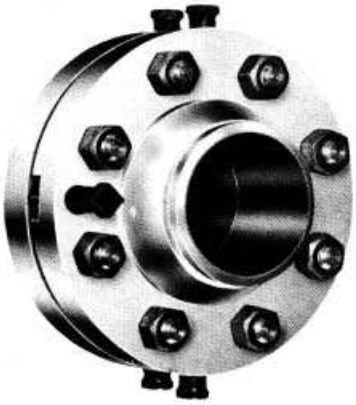

■ SPECIFICATION

Slip-on
Welding neck
Ring-joint welding neck
Socket-Weld

25mm (1 inch) to 500mm (20 inches)

JIS 10, 20, 30kg/Cm² RF
ANSI (or JPI) 150, 300, 600lb RF

A105, 304SS, 316SS

Stud bolts: SNB7
Nuts : S45C
Jack bolts and nuts : S25C

Thickness: 1.5mm
Material: Asbestos sheet gasket
vortex gaskets and other
special types

ANSI 150#: Insertion welding type (Slip-on-type)
ANSI 300#, 600#: Butt welding type (welding neck)
ANSI 600#over: Butt welding neck (ring-joint WN)

Select referring to the model number construction table

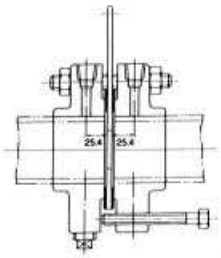

SO-RF Type

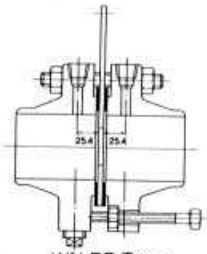

WN-RF Type

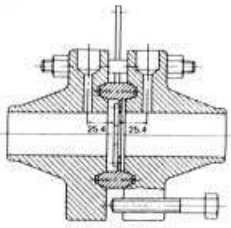

WN-RJ Type

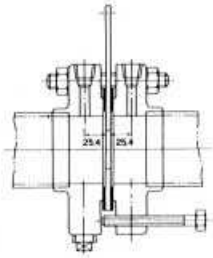

SW-RF Type

■ PRESSURE TAPS CONNECTIONS

Pressure connection holes in the pipe should be 1/2 inch for 4-inch and larger lines, 3/4 inch for 3-inch lines, and 1/4 inch for 2-inch lines. When flange taps are used, insert a drill of the proper size through the connection holes in the flanges and drill through the pipe. When connections in the pipe are used, weld half-couplings to the pipe at the proper locations, insert a drill through them, and drill through the pipe.
Round off the edges of the holes slightly to be sure that no burrs remain in the pipe.

❶ Flange Taps. Pressure connection holes are located in the flanges, 1 inch upstream and 1 inch down stream from the corresponding orifice plate faces.

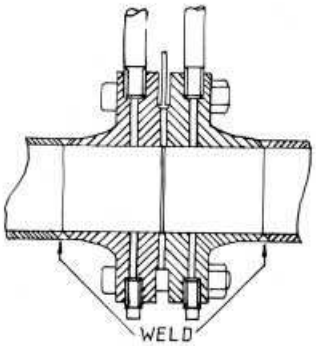

❷ Corner Taps. On lines smaller than 2 inches. The effect is that the pressure taps are right at the orifice plate.

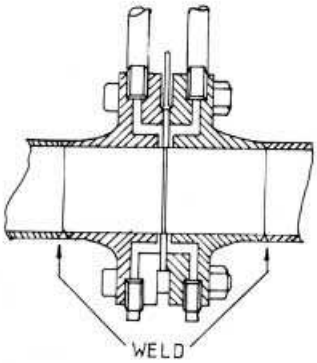

❸ 2½D and 8D Taps, also called Full-Flow Pipe Taps. Connections are installed 2½ pipe-diameters upstream from the upstream face of the orifice plate and 8 pipe-diameters downstream from the upstream face of the orifice plate.

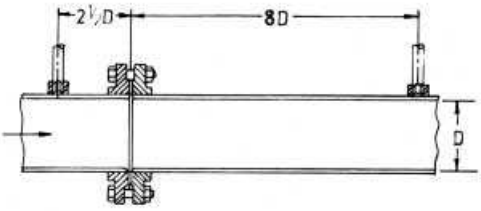

❹ 1D and ½D Taps. This type of connection (also called Radius Taps) is a modification of, and has largely replaced, the Vena Contracta taps. It yields equally accurate results and has the advantage that the downstream connection is easier to locate. The upstream connection should be at 1D above the upstream face of the orificc plate, but location of the upstream connection anywhere between 1/2D and 2D introduces only negligible error. The downstream connection is located 1/2D downstream from the upstream face of orifice plate.

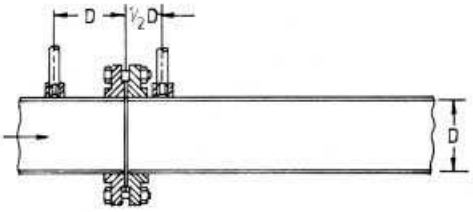

❺ "Vena Contracta" Taps. The upstream connection (dimension M,) may be located anywhere between 1/2 and 2pipe-diameters above the upstream face of the orifice plate. The downstream connection (dimension N,) is made at the point of maximum flow constriction and is given by the table below:

Orifice to Pipe Diameter Ratio, d/D	Location of Downstream Pressure Tap(N) (Pipe-Diameters)		
	Minimum	Mean	Maximum
0.2	.37	.85	1.30
0.3	.44	.80	1.15
0.4	.47	.73	1.00
0.5	.47	.66	.84
0.6	.42	.57	.70
0.7	.35	.45	.55
0.8	.25	.33	.41

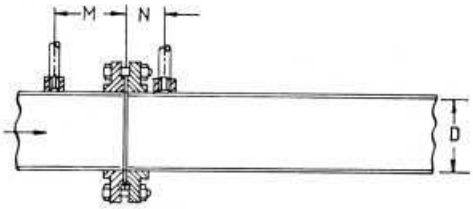

Orifice Flange Assemblies

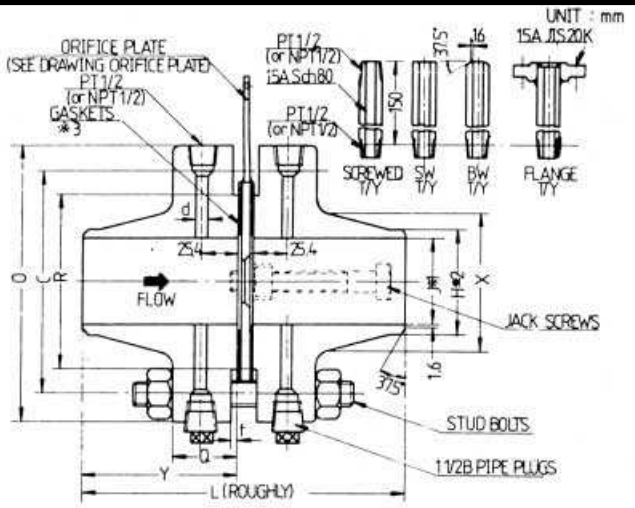

■ FOR ANSI 300 FLANGES

Nominal Pipe Size mm	Nominal Pipe Size inch	Diam of Flange O	Thickness of Flange Q	Dof Hub at Point of Weld'g H2	Diam of Hub X	Length Through Hub Y	Diam of Raised Face R	Hight of Raised Face f	Diam of Tap Holes d	Diam of Bolt Circle c	Number of Bolt	Bolt Size	Total Length L
15	1/2	3 3/4	1 1/2	0.84	1 1/2	3	1 5/8	0.06		2 5/8	4	1/2	
20	3/4	4 5/8	1 1/2	1.05	1 7/8	3 1/8	1 11/16	0.06		3 1/4	4	5/8	
25	1	4 7/8	1 1/2	1.32	2 1/8	3 1/4	2	0.06	1/4	3 1/2	4	5/8	
40	1 1/2	6 1/8	1 1/2	1.90	2 3/4	3 5/8	2 1/8	0.06	1/4	4 1/2	4	3/4	
50	2	6 1/2	1 1/2	2.38	3 9/16	3 3/8	3 5/8	0.06	1/4	5	8	5/8	
65	2 1/2	7 1/2	1 1/2	2.88	3 13/16	3 1/2	4 1/8	0.06	1/4	5 7/8	8	3/4	
80	3	8 1/4	1 1/2	3.50	4 5/8	3 1/2	5	0.06	3/8	6 5/8	8	3/4	
100	4	10	1 1/2	4.50	5 3/4	3 5/8	6 3/16	0.06	1/2	7 7/8	8	3/4	
150	6	12 1/2	1 1/2	6.63	8 1/8	3 13/16	8 1/2	0.06	1/2	10 5/8	12	3/4	
200	8	15	1 5/8	8.63	10 1/4	4 1/8	10 5/8	0.06	1/2	13	12	7/8	
250	10	17 1/2	1 7/8	10.75	12 5/8	4 5/8	12 3/4	0.06	1/2	15 1/4	16	1	
300	12	20 1/2	2	12.75	14 3/4	5 1/8	15	0.06	1/2	17 3/4	20	1 1/8	
350	14	23	2 1/8	14.00	16 3/4	5 5/8	16 1/4	0.06	1/2	20 1/4	20	1 1/8	
400	16	25 1/2	2 1/4	16.00	19	5 3/4	21	0.06	1/2	24 3/4	20	1 1/4	
450	18	28	2 3/8	18.00	21	6 1/4	21	0.06	1/2	24 3/4	20	1 1/4	
600	20	30 1/2	2 1/2	20.00	23 1/8	6 5/8	23	0.06	1/2	27	24	1 1/4	
700	24	36	2 3/4	24.00	27 3/4	6 3/4	27 1/4	0.06	1/2	32	24	1 1/2	

■ FOR ANSI600 FLANGES

Nominal Pipe Size mm	Nominal Pipe Size inch	Diam of Flange O	Thickness of Flange Q	Dof Hub at Point of Weld'g H2	Diam of Hub X	Length Through Hub Y	Diam of Raised Face R	Hight of Raised Face f	Diam of Tap Holes d	Diam of Bolt Circle c	Number of Bolt	Bolt Size	Total Length L
100	4	10 3/4	1 1/2	4.50	6	4	6 3/16	0.25	1/2	8 1/2	8	7/8	
150	6	14	1 7/8	6.63	8 3/4	4 5/8	8 1/2	0.25	1/2	11 1/2	12	1	
200	8	16 1/2	2 5/16	8.63	10 3/4	5 1/4	10 5/8	0.25	1/2	13 3/4	12	1 1/8	
250	10	20	2 1/2	10.75	13 1/2	6	12 3/4	0.25	1/2	17	16	1 1/4	
300	12	22	2 5/8	12.75	15 3/4	6 1/8	15	0.25	1/2	19 1/4	20	1 1/4	
350	14	23 3/4	2 3/4	14.00	17	6 1/2	16 1/4	0.25	1/2	20 3/4	20	1 3/8	
400	16	27	3	16.00	19 1/2	7	18 1/2	0.25	1/2	23 3/4	20	1 1/2	
450	18	29 1/4	3 1/4	18.00	21 1/2	7 1/4	21	0.25	1/2	25 3/4	20	1 5/8	
500	20	32	3 1/2	20.00	24	7 1/2	23	0.25	1/2	28 1/2	24	1 5/8	
600	24	37	4	24.00	28 3/4	8	27 1/4	0.25	1/2	33	24	1 7/8	

■ FOR ANSI 900 FLANGES

Nominal Pipe Size mm	Nominal Pipe Size inch	Diam of Flange O	Thickness of Flange Q	Dof Hub at Point of Weld'g H2	Diam of Hub X	Length Through Hub Y	Diam of Raised Face R	Hight of Raised Face f	Diam of Tap Holes d	Diam of Bolt Circle c	Number of Bolt	Bolt Size	Total Length L
25	1	5 1/8	1 3/8	1.32	2 11/16	3 1/8	2	0.25	1/4	4	4	7/8	
40	1 1/2	7	1 3/8	1.90	2 3/4	3 3/8	2 5/8	0.25	1/4	4 7/8	4	1	
50	2	8 1/2	1 1/2	2.38	4 1/8	4	3 5/8	0.25	1/4	6 1/2	8	7/8	
65	2 1/2	9 5/8	1 5/8	2.88	4 7/8	4 1/8	5 1/8	0.25	1/4	7 1/2	8	1	
80	3	9 1/2	1 1/2	3.50	5	4	5	0.25	3/8	7 1/2	8	7/8	
100	4	11 1/2	1 3/4	4.50	6 1/4	4 1/2	6 3/16	0.25	1/2	9 1/4	8	1 1/8	
150	6	15	2 5/16	6.63	9 1/4	5 1/2	8 1/2	0.25	1/2	12 1/2	12	1 1/8	
200	8	18 1/2	2 1/2	8.63	11 7/8	6 7/8	10 5/8	0.25	1/2	15 1/2	12	1 3/8	
250	10	21 1/2	2 3/4	10.75	14 1/2	7 1/4	12 3/4	0.25	1/2	18 1/2	16	1 3/8	
300	12	24	3 1/8	12.75	16 1/2	7 7/8	15	0.25	1/2	21	20	1 3/8	

■ FOR ANSI 1500 FLANGES

Nominal Pipe Size mm	Nominal Pipe Size inch	Diam of Flange O	Thickness of Flange Q	Dof Hub at Point of Weld'g H2	Diam of Hub X	Length Through Hub Y	Diam of Raised Face R	Hight of Raised Face f	Diam of Tap Holes d	Diam of Bolt Circle c	Number of Bolt	Bolt Size	Total Length L
25	1	5 7/8	1 3/8	1.32	2 11/16	3 1/8	2	0.25	1/4	4	4	7/8	
40	1 1/2	7	1 3/8	1.90	2 3/4	3 5/8	2 5/8	0.25	1/4	4 7/8	4	1	
50	2	8 1/2	1 1/2	2.38	4 1/8	4	3 5/8	0.25	1/4	6 1/2	8	7/8	
65	2 1/2	9 5/8	1 5/8	2.88	4 7/8	4 1/8	4 7/8	0.25	1/4	7 1/2	8	1	
80	3	10 1/2	1 7/8	3.50	5 1/4	4 3/8	5	0.25	3/8	8	8	1 1/8	
100	4	12 1/4	2 1/8	4.50	6 5/8	4 7/8	6 3/16	0.25	1/2	9 1/2	8	1 1/4	
150	6	15 1/2	3 1/4	6.63	9	6 3/4	8 1/2	0.25	1/2	12 1/2	12	1 3/8	
200	8	19	3 5/8	8.63	11 1/2	8 3/8	10 3/4	0.25	1/2	15 1/2	12	1 5/8	
250	10	23	4 1/4	10.75	14 1/2	10	12 3/4	0.25	1/2	19	12	1 7/8	
300	12	26 1/2	4 7/8	12.75	17 3/4	11 1/8	15	0.25	1/2	22 1/2	16	2	

■ FOR ANSI 2500 FLANGES

Nominal Pipe Size mm	Nominal Pipe Size inch	Diam of Flange O	Thickness of Flange Q	Dof Hub at Point of Weld'g H2	Diam of Hub X	Length Through Hub Y	Diam of Raised Face R	Hight of Raised Face f	Diam of Tap Holes d	Diam of Bolt Circle c	Number of Bolt	Bolt Size	Total Length L
25	1	6 1/4	1 3/8	1.32	2 1/4	3 1/2	2	0.25	1/4	4 1/4	4	7/8	
40	1 1/2	8	1 3/4	1.90	3 1/8	4 3/8	2 7/8	0.25	1/4	5 3/4	4	1 1/8	
50	2	9 1/4	2	2.38	3 3/4	5	3 5/8	0.25	1/4	6 3/4	8	1	
65	2 1/2	10 1/2	2 1/4	2.88	4 1/2	5 5/8	4 1/8	0.25	1/4	7 3/4	8	1 1/8	
80	3	12	2 5/8	3.50	5 1/4	6 3/8	5	0.25	3/8	9	8	1 1/4	
100	4	14	3	4.50	6 1/2	7 1/2	6 3/16	0.25	1/2	10 3/8	8	1 1/2	
150	6	19	4 1/4	6.63	9 1/4	10 3/4	8 1/2	0.25	1/2	14 1/2	8	2	
200	8	21 3/4	5	8.63	12	12 1/2	10 3/4	0.25	1/2	17 1/4	12	2	
250	10	26 1/2	6 1/2	10.75	14 3/4	16 1/2	12 3/4	0.25	1/2	21 1/4	12	2 1/2	
300	12	30	7 1/4	12.75	17 3/8	18 1/4	15	0.25	1/2	24 3/8	16	2 3/4	

Orifice Flange Assemblies

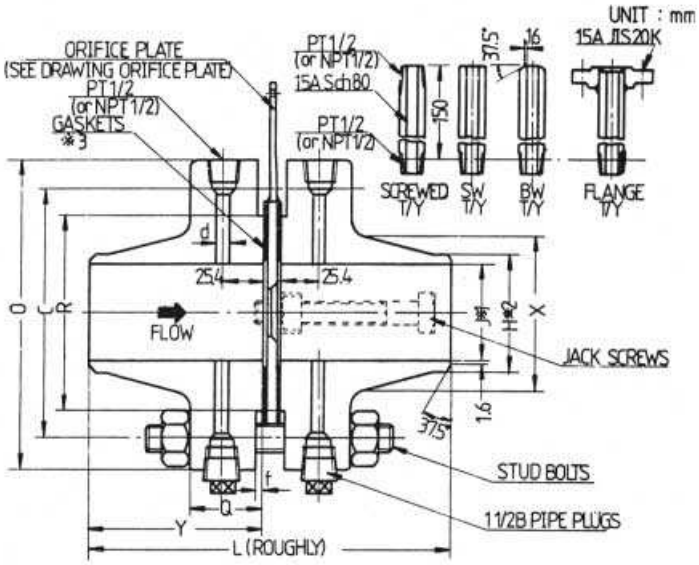

■ FOR JIS 10K FLANGES

Nominal Pipe Size		Diam of Flange O	Thickness of Flange Q	Dof Hub at Point of Weld'g H2	Diam of Hub X	Length Through Hub Y	Diam of Raised Face R	Hight of Raised Face f	Diam of Tap Holes d	Diam of Bolt Circle c	Number of Bolt	Bolt Size	Total Length L
mm	inch												
1	25	125	38.1	34.0	50	80	70	1	4	70	4	M16	165
1¼	32	135	38.1	42.7	60	80	80	2	4	100	4	M16	165
1½	40	140	38.1	48.6	66	83	85	2	4	105	4	M16	171
2	50	155	38.1	60.5	80	83	100	2	4	120	4	M16	171
2½	65	175	38.1	76.3	98	86	120	2	4	140	4	M16	178
3	80	185	38.1	89.1	112	86	130	2	6	150	8	M16	178
3½	90	195	38.1	101.6	122	86	140	2	6	160	8	M16	178
4	100	210	38.1	114.3	132	90	155	2	6	175	8	M16	186
5	125	250	38.1	139.8	160	95	185	2	8	210	8	M20	196
6	150	280	38.1	165.2	190	100	215	2	8	240	8	M20	206
8	200	330	38.1	216.3	238	110	265	2	12	290	12	M20	227
10	225	350	38.1	241.8	264	110	285	2	12	310	12	M20	227
12	300	445	38.1	318.5	346	120	370	3	12	400	16	M22	247
14	350	490	38.1	355.6	386	130	415	3	12	445	16	M22	267
16	400	560	38.1	406.4	442	130	475	3	12	510	16	M24	267

■ FOR JIS 30K FLANGES

Nominal Pipe Size		Diam of Flange O	Thickness of Flange Q	Dof Hub at Point of Weld'g H2	Diam of Hub X	Length Through Hub Y	Diam of Raised Face R	Hight of Raised Face f	Diam of Tap Holes d	Diam of Bolt Circle c	Number of Bolt	Bolt Size	Total Length L
mm	inch												
1	25	130	38.1	34.4	54	83	70	1	4	95	4	M16	171
1¼	32	140	38.1	43.1	64	84	80	2	4	105	4	M16	173
1½	40	160	38.1	49.1	70	86	90	2	4	120	4	M20	177
2	50	165	38.1	61.0	86	86	105	2	4	130	8	M16	177
2½	65	200	38.1	76.9	104	90	130	2	4	160	8	M20	186
3	80	210	38.1	89.7	118	90	140	2	6	170	8	M20	186
3½	90	230	38.1	102.3	130	90	150	2	6	185	8	M22	186
4	100	240	38.1	115.1	142	92	160	2	6	195	8	M22	190
5	125	275	38.1	140.7	172	102	195	2	8	230	8	M22	210
6	150	325	38.1	166.2	204	102	235	2	8	275	12	M24	210
8	200	370	42	217.5	256	112	280	2	12	320	12	M24	231
10	250	450	48	268.7	314	118	345	2	12	390	12	M30	243
12	300	515	52	320.0	370	130	405	3	12	450	16	M30	257
14	350	560	54	357.2	412	144	450	3	12	495	16	M30	295
16	400	630	60	408.3	468	150	510	3	12	560	16	M36	307

■ FOR JIS 16/20K FLANGES

Nominal Pipe Size		Diam of Flange O	Thickness of Flange Q	Dof Hub at Point of Weld'g H2	Diam of Hub X	Length Through Hub Y	Diam of Raised Face R	Hight of Raised Face f	Diam of Tap Holes d	Diam of Bolt Circle c	Number of Bolt	Bolt Size	Total Length L
mm	inch												
1	25	125	38.1	340	50	80	70	1	4	90	4	M16	165
1¼	32	135	38.1	42.7	60	80	80	2	4	100	4	M16	165
1½	40	140	38.1	48.6	66	83	85	2	4	105	4	M16	171
2	50	155	38.1	60.5	80	83	100	2	4	120	8	M16	171
2½	65	175	38.1	76.3	98	86	120	2	4	140	8	M16	178
3	80	200	38.1	89.1	112	86	135	2	6	160	8	M20	178
3½	90	210	38.1	101.6	124	86	145	2	6	170	8	M20	178
4	100	225	38.1	114.3	138	90	10	2	6	185	8	M20	186
5	125	270	38.1	139.8	170	95	195	2	8	225	8	M22	196
6	150	365	38.1	165.2	202	100	230	2	8	260	12	M22	206
8	200	350	38.1	216.3	252	110	275	2	12	305	12	M22	227
10	250	430	38.1	267.4	312	115	345	2	12	380	12	M24	237
12	300	480	38.1	318.5	364	120	395	3	12	430	16	M24	247
14	350	540	40	355.6	408	132	440	3	12	480	16	M30	271
16	400	605	46	408.4	456	138	495	3	12	540	16	M30	283
18	450	675	48	457.2	522	148	560	3	12	605	20	M30	303

■ FOR JIS 40K FLANGES

Nominal Pipe Size		Diam of Flange O	Thickness of Flange Q	Dof Hub at Point of Weld'g H2	Diam of Hub X	Length Through Hub Y	Diam of Raised Face R	Hight of Raised Face f	Diam of Tap Holes d	Diam of Bolt Circle c	Number of Bolt	Bolt Size	Total Length L
mm	inch												
1	25	130	38.1	34.4	54	83	70	1	4	95	4	M16	171
1¼	32	140	38.1	43.1	64	84	80	2	4	105	4	M16	173
1½	40	160	38.1	49.1	70	86	90	2	4	120	4	M20	177
2	50	165	38.1	61.0	86	86	105	2	4	130	8	M16	177
2½	65	200	38.1	76.9	174	90	130	2	4	160	8	M20	186
3	80	210	38.1	89.7	118	90	140	2	6	170	8	M20	186
3½	90	230	38.1	102.3	130	90	150	2	6	185	8	M22	186
4	100	250	38.1	115.1	152	92	165	2	6	205	8	M22	190
5	125	300	40	140.7	192	104	200	2	8	250	8	M24	214
6	150	355	44	166.2	220	108	240	2	8	295	12	M30	222
8	200	405	50	217.5	270	120	290	2	12	345	12	M30	247
10	250	475	56	268.7	330	126	355	2	12	410	12	M30	259
12	300	540	60	320.0	380	138	410	3	12	470	16	M36	283
14	350	585	64	357.2	426	154	455	3	12	515	16	M36	315
16	400	645	70	408.3	476	160	515	3	12	570	16	M36	327
18	450	675	48	457.2	522	148	560	3	12	605	20	M30	303

Orifice Flange Assemblies

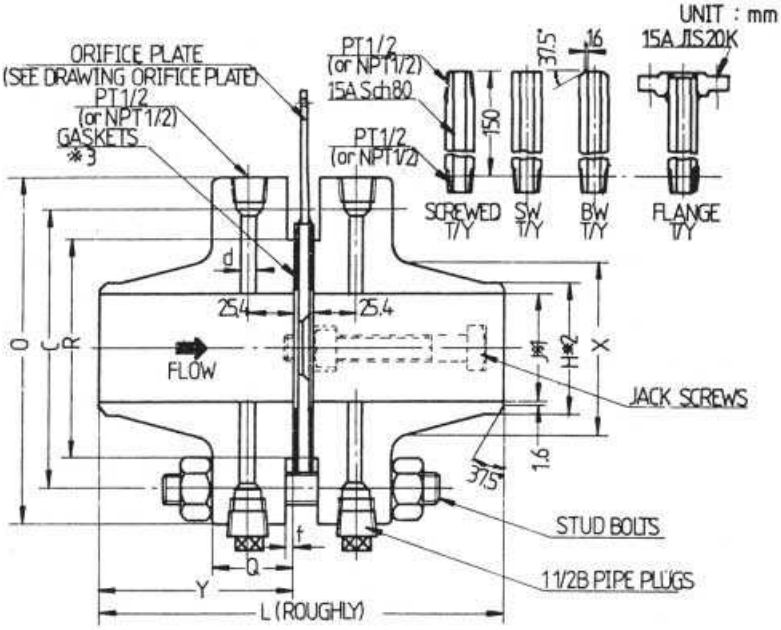

■ FOR ANSI 300 FLANGES

Nominal Pipe Size	Diam of Flange O	Thickness of Flange Q	D. of Hub at Point of Weld'g H_2	Diam of Hub X	Length Through Hub Y	Pitch Diam of Groove P	Depth of Groove E	Diam of Tap Holes d	Diam of Bolts Circle c	Number of bolt	Bolt size	Total Length L
11/2	155.6	38.1	48.6	69.9	85.8	68.26	6.4	4	114.3	4	3/4	186
2	165.1	39.7	60.5	84.1	87.3	82.55	7.9	4	127.0	8	5/8	189
21/2	190.5	39.7	76.3	100.0	90.5	101.60	7.9	4	149.2	8	3/4	197
3	209.6	39.7	89.1	117.5	90.5	123.83	7.9	6	168.3	8	3/4	197
31/2	228.6	39.7	101.6	133.4	90.5	131.76	7.9	6	184.2	8	3/4	197
4	254.0	39.7	114.3	146.1	93.6	149.23	7.9	6	200.0	8	3/4	203
5	279.4	42.9	139.8	177.8	106.3	180.98	7.9	8	235.0	8	3/4	228
6	317.5	44.5	165.2	206.4	106.3	211.14	7.9	8	269.9	12	3/4	228
8	381.0	49.3	216.3	260.4	119.1	269.88	7.9	12	330.2	12	7/8	255
10	444.5	55.6	267.4	320.7	125.4	323.85	7.9	12	387.4	16	1	268
12	520.7	58.8	318.5	374.7	138.2	381.00	7.9	12	450.9	16	11/8	293
14	584.2	62.0	365.6	425.5	150.9	419.10	7.9	12	514.4	20	11/8	318

■ FOR ANSI 900 FLANGES

Nominal Pipe Size	Diam of Flange O	Thickness of Flange Q	D. of Hub at Point of Weld'g H_2	Diam of Hub X	Length Through Hub Y	Pitch Diam of Groove P	Depth of Groove E	Diam of Tap Holes d	Diam of Bolts Circle c	Number of bolt	Bolt size	Total Length L
11/2	177.8	38.1	48.6	69.9	89.0	68.26	6.4	4	123.8	4	1	193
2	215.9	46.1	60.5	104.8	109.6	95.25	7.9	4	163.1	8	7/8	234
21/2	244.5	49.7	116.9	123.8	112.8	107.95	7.9	4	190.6	8	1	249
3	241.3	46.1	89.1	127.0	109.6	123.83	7.9	6	190.5	8	7/8	235
4	292.1	52.4	114.3	158.8	122.2	149.23	7.9	6	235.0	8	11/8	260
5	349.3	58.8	139.8	190.5	135.0	180.98	7.9	8	279.4	8	11/4	286
6	381.0	63.5	165.2	235.0	147.6	211.14	7.9	8	317.5	12	11/8	311
8	469.9	71.5	216.3	298.5	169.9	269.88	7.9	12	393.7	12	13/8	356
10	546.1	77.8	267.4	368.3	192.1	323.85	7.9	12	469.9	16	13/8	401
12	609.6	87.4	318.5	419.1	208.0	381.00	7.9	12	533.4	20	13/8	433
14	641.4	96.9	355.6	450.9	223.8	419.10	11.1	12	558.8	20	11/12	464

■ FOR ANSI 600 FLANGES

Nominal Pipe Size	Diam of Flange O	Thickness of Flange Q	D. of Hub at Point of Weld'g H_2	Diam of Hub X	Length Through Hub Y	Pitch Diam of Groove P	Depth of Groove E	Diam of Tap Holes d	Diam of Bolts Circle c	Number of bolt	Bolt size	Total Length L
11/2	155.6	38.1	48.6	69.9	85.8	68.26	6.4	4	114.3	4	3/4	185
2	165.1	39.7	60.5	84.1	87.3	82.55	7.9	4	127.0	8	5/8	189
21/2	190.5	39.7	76.3	100.0	90.5	101.60	7.9	4	149.2	8	3/4	197
3	209.6	39.7	89.1	117.5	90.5	123.83	7.9	6	168.3	8	3/4	197
31/2	228.6	42.9	101.6	133.4	93.6	131.76	7.9	6	184.2	8	7/8	203
4	273.1	46.1	114.3	152.4	109.6	149.23	7.9	6	215.9	8	7/8	235
5	330.2	52.4	139.8	188.9	122.2	180.98	7.9	8	266.7	8	1	260
6	355.6	55.6	165.2	222.3	125.4	211.14	7.9	8	292.1	12	1	267
8	419.1	63.5	216.3	273.1	141.3	269.88	7.9	12	349.3	12	11/8	299
10	508.0	71.5	267.4	342.9	160.4	323.85	7.9	12	431.8	16	11/4	337
12	558.8	74.5	318.5	400.1	163.6	381.00	7.9	12	489.0	20	11/4	344
14	603.3	77.8	355.6	431.8	173.0	419.10	7.9	12	527.1	20	13/8	363

■ FOR ANSI 1500 FLANGES

Nominal Pipe Size	Diam of Flange O	Thickness of Flange Q	D. of Hub at Point of Weld'g H_2	Diam of Hub X	Length Through Hub Y	Pitch Diam of Groove P	Depth of Groove E	Diam of Tap Holes d	Diam of Bolts Circle c	Number of bolt	Bolt size	Total Length L
11/2	100.8	38.1	118.6	69.9	89.0	68.06	6.11	11	112.8	11	1	183
2	215.9	46.1	60.5	104.8	109.6	95.25	7.9	4	165.1	8	7/8	234
21/2	244.5	49.3	76.3	123.8	112.8	107.95	7.9	4	190.5	8	1	241
3	266.7	55.6	89.1	133.4	125.4	136.3	7.9	6	203.2	8	11/8	267
4	311.2	62.0	114.3	161.9	131.8	161.93	7.9	6	241.3	8	11/4	279
5	374.7	81.0	139.8	196.9	163.5	193.68	7.9	8	292.1	8	11/2	343
6	393.7	92.1	165.2	228.6	181.0	211.14	9.55	8	317.5	12	13/8	378
8	482.6	103.2	216.3	292.1	223.8	269.88	11.1	12	393.7	12	15/8	464
10	584.2	119.1	267.4	368.3	265.1	323.85	11.1	12	482.6	12	17/8	547
12	673.1	138.2	318.5	450.9	296.9	381.00	14.3	12	571.5	16	2	611
14	749.3	149.3	355.6	495.3	314.4	419.10	15.9	12	635.0	16	21/4	646

ORIFICE PLATE	MODEL : WOP
ORIFICE WITH RING	MODEL : WOR
ORIFICE WITH HOLDING RING	MODEL : WOJ
ORIFICE FLANGE ASSEMBLY	MODEL : WFH

WISE®

ORDERING INFORMATION

BASE MODEL- 1st thru 3rd Characters

WOP : ORIFICE PLATE
WOR : ORIFICE WITH RING
WOJ : ORIFICE WITH HOLDING RING
WFH : ORIFICE FLANGE ASSEMBLY

4th and 5th Character - Size

Code XX : Refer to Size Tables

6th and 7th Character - Rating

Code XX : Refer to Rating Tables

8th Character - Plate Material

Code X : Refer to Material Tables

9th Character - Flange Type

Code
N : None
S : Slip-On
W : Welding-Neck
O : Socket-Weld
J : Ring type Joint, Only available with Woj

10th Character - Flange Material

N : None
Code X : Refer to Material Tables

model : WVT Venturi Tube

The Venturi tube, is characterized by its tapered inlet and diverging outlet. This design greatly reduces head loss to the system when compared to an orifice plate. In fact, the Venturi can handle 25% to 50% more flow than an orifice for comparable larger line size and lower head loss. The Venturi is well suited for dirty fluids. There are no places for dirt to build up in the tube. Traditionally, the Venturi tube has been used on low pressure gas flow, water and waste applications.

Venturi tubes are generally constructed with a system of pressure taps which project radially into the pipe and feed into a common chamber known as a piezometer ring. This multiple tap arrangement provides an average pressure reading over the entire circumference of the element. As a result, the need for long pipe runs is eliminated. A general rule is that a venturi tube requires only haf the upstream and downstream runs of an orifice plate.

The discharge coefficient of the Venturi is constant and predictable to ± 1% for pipe Reynolds numbers greater than 100,000. Venturi elements are not as reliable at lower Reynolds numbers (Figure 10). The Venturi tube is a relatively high cost device. However, low pumping costs and ruduced piping requirements can make it cost effective.

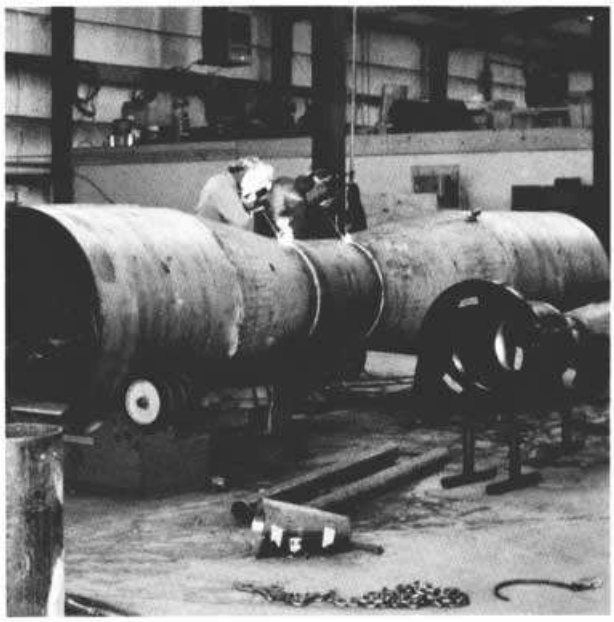

■ SPECIFICATIONS

fabricated flange type
fabricated weld-on type
machined flange type
rectangular type

JIS Z 8762-1969
(ISO R541-1967)

JIS 20 kg/cm²
ANSI 300LB

50mm to 120mm
(2 to 1200·48 INCH)

CARBON STEEL
304SS, 316SS

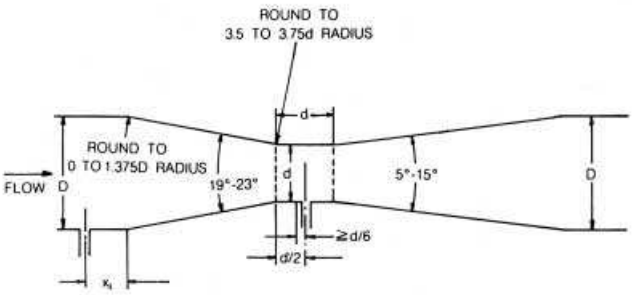

The Critical Dimensions of the Classical Venturi Tube

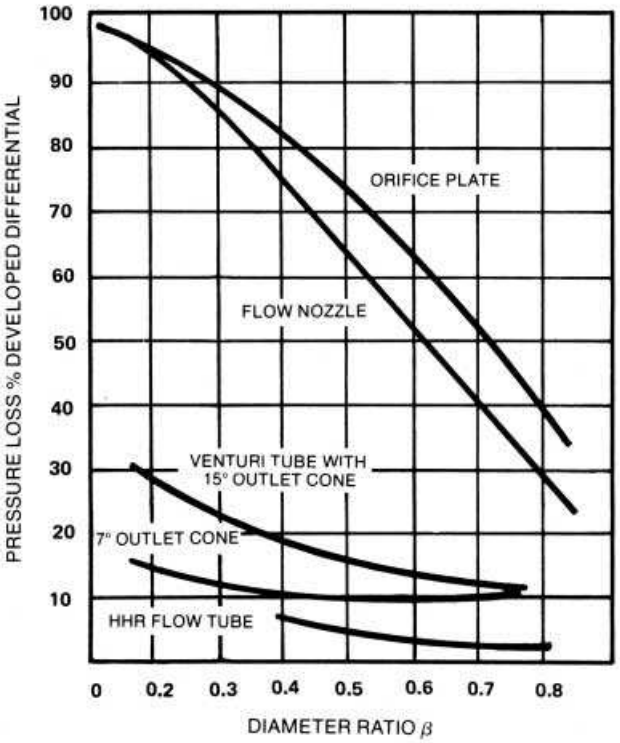

VENTURI TUBE
MODEL : WVT

ORDERING INFORMATION
BASE MODEL- 1st thru 3rd Characters
WOP : VENTURI TUBE

4th and 5th Character - Size

Code XX : Refer to Size Tables

6th and 7th Character - Rating

Code XX : Refer to Rating Tables

8th Character - Material

Code X : Refer to Material Tables

9th and 10th Character - Type

Code

FF	:	Fabricated Flange
FW	:	Fabricated Weld-On
FM	:	Machined Flange
FR	:	Rectangular

FABRICATED FLANGE TYPE
Available in sizes 6'' and larger

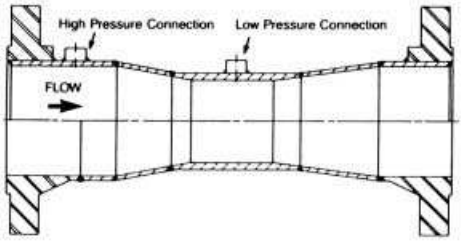

FABRICATED WELD-ON TYPE
Available in sizes 6'' and larger

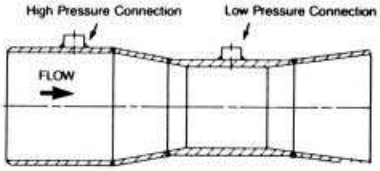

MACHINED FLANGE TYPE
Available in sizes 6'' and smaller

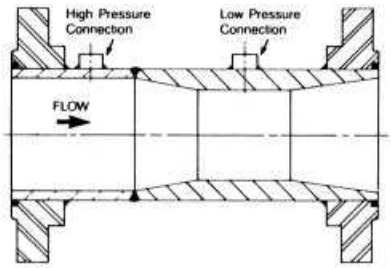

RECTANGULAR TYPE
Available in sizes 6'' and larger

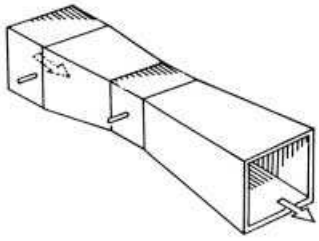

model : WFN Flow Nozzle

The flow nozzles, more costly than other orifice due to their structure, are suited for determining the flow rates of fluids flowing at high temperature and high pressure. Under the same measuring conditions, a flow nozzle has a higher mechanical strength, can permit the flow of more than 60 percent greater volume of a fluid, and can measure the flow rates of fluids containing solid particles less disturbed, than an orifice having the same bore. Thus, they are suited, in addition, for highspeed flowing fluids. We can supply not only single flow nozzles, but also flow nozzles having welded short pipes on both their upstream and downstream sides.

WELD-IN

■ SPECIFICATIONS

Flange Type
Weld-in Type
Holding Ring Type

Long-radius flow nozzle.
JIS Z 8762-1969 (ISO R541-1967)
NOTE: JIS Z 8762-1969 flow data used to calculate nozzle throats is identical to that of ISO R541-1967

1D and 1/2D taps

100mm to 500 mm (4 to 20 inches)
$0.25 < \beta < 0.8$
(low-beta) long-radius nozzle $0.2 \leqq \beta \leqq 0.5$
(high-beta) long-radius nozzle $0.25 \leqq \beta \leqq 0.8$
β: Ratio of throat to pipe diameter = d/D
(d: Throat diameter)

Flange Types
Weld-in Type
Holding Ring Type

Carbon Steel
304SS, 316SS

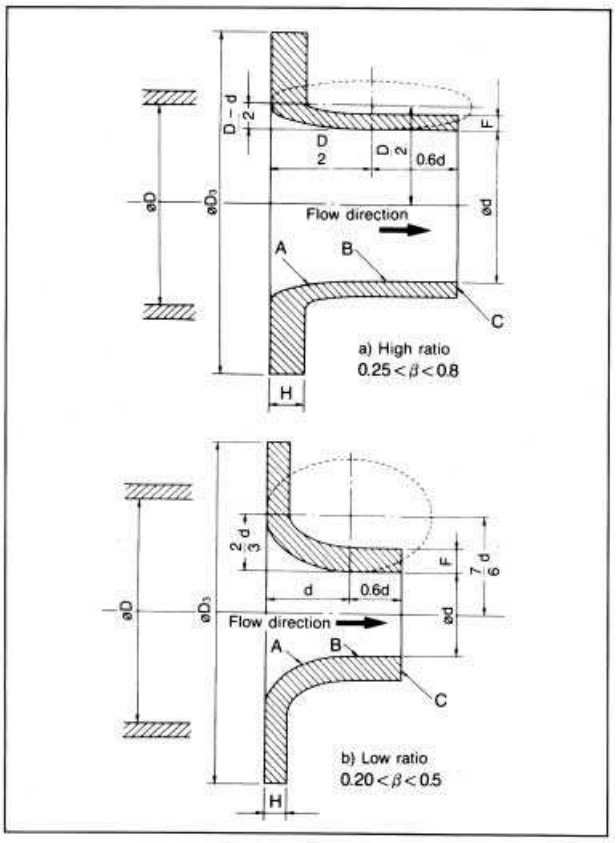

FLOW NOZZLE
MODEL : WFN

ORDERING INFORMATION
BASE MODEL- 1st thru 3rd Characters
WFN : FLOW NOZZLE

4th and 5th Character - Size

Code XX : Refer to Size Tables

6th and 7th Character - Rating

Code XX : Refer to Rating Tables

8th Character - Material

Code X : Refer to Material Tables

9th Character - Type

Code
- F : Flange
- W : Weld - In
- H : Holding Ring

10th Character - Pipe Material

Code X : Refer to Material Tables

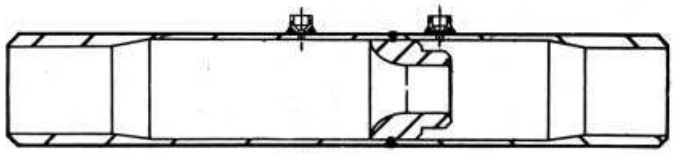

Weld-in Type

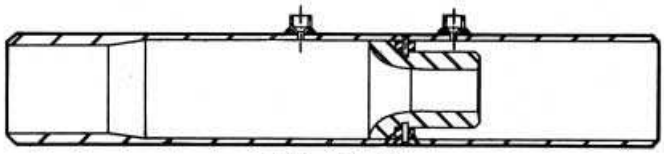

Holding Ring Type

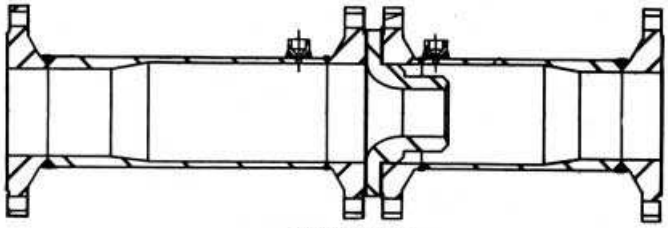

Flange Type

LINE SIZE, RATING, MATERIAL TABLES

CODE	LINE SIZE	CODE	RATING	CODE	MATERIAL
0A	1/2″ (15A)	AA	ANSI 150#	A	304SS
0B	3/4″ (20A)	AB	ANSI 300#	B	304LSS
01	1 (25A)	AC	ANSI 600#	C	316SS
1A	1 1/2″ (40A)	AD	ANSI 900#	D	316LSS
02	2 (50A)	AE	ANSI 1500#	E	INCONEL
2A	2 1/2″ (65A)	AF	ANSI 2500#	F	HAST-C
03	3″ (80A)	JA	JIS 10K	G	MONEL
04	4″ (100A)	JB	JIS 20K	H	TITANIUM
06	6″ (150A)	JC	JIS 40K	J	CARBON STEEL
08	8″ (200A)	JD	JIS 63K	K	F11
10	10″ (250A)	ZZ	OTHER	L	F22
12	12″ (300A)			M	F5
14	14″ (350A)			P	LOW TEMP-CS
16	16″ (400A)			Z	OTHER
18	18″ (450A)				
20	20″ (500A)				
24	24″ (600A)				
26	26″ (650A)				
28	28″ (700A)				
30	30″ (750A)				
ZZ	SPECIAL				

■ PIPE DIMENSIONS

Corrosives	Concent	Temp.(c)	304SS	321SS	316SS	316LSS	316J1LSS	310S SS	347SS	Capenter 20	Inconel 600	Nimanic	Hastelloy B	Hastelloy C	Hastelloy X	Tilanium	Monel	Tantalum	Telton	Copper	Zirconium	Nicket	PVC	Cupro-nicker	Aluminium	Brass	Lead	Common steel	50Co-30Cr	Haynes alloy 25
H2SO4	5%	30	B	B	B	B	B	B	B	A	B	B	A	A	One of the Hastelloy series and excellent in heat resistance.	B	B	A	A	B	A	B	A	B	C	C	A	C	Caball-base alloy and excellent in heat and abrasion resistance.	A
	▪	B.P	C	C	C	C	C	C	C	B	C	C	A	B		C	C	A	C	A	C		C	A	C	C	A	C		B
	10%	30	B	B	B	B	B	B	B	A	B	B	A	A		B	B	A	A	B		B	A	B	C	C	A	C		A
	▪	B.P	C	C	C	C	C	C	C	A	C	C	A	B		C	C	A		C		B		C	C	C	A	C		B
	50%	30	C	C	C	C	C	C	C	A	B	B	A	A		B	B	A	A	B		B	A	B	C	C	A	C		A
	▪	B.P	C	C	C	C	C	C	C	A	C	C	A	B		C	C	A		C		B		C	C	C	B	C		B
	5%	30	B	B	B	B	B	B	B	B	B	B	A	A		B	B	A	A	B	B	B	A	B	C	C	A	C		A
	▪	B.P	C	C	C	C	C	C	C	A	C	C	A	B		C	C	A		C	B	B		C	C	C	B	C		B
HCL	10%	30	C	C	C	C	C	C	C	B		B	A	A		A	B	A	A	B	B		A	C	C	C	B	C		B
	▪	B.P	C	C	C	C	C	C	C	C		B	A	A		B	B	A						C	C	C	B	C		C
	20%	30	C	C	C	C	C	C	C	C	A	B	A	A		A	B	A	A	B	B		A	C	C	C	B	C		B
	▪	B.P	C	C	C	C	C	C	C	C		B	A	A		B	B	A						C	C	C	B	C		C
	20%	30	C	C	C	C	C	C	C	B	B	B	A	A		A	B	A	A	B	B		A	C	C	C	B	C		B
	▪	B.P	C	C	C	C	C	C	C	C	B	B	A	A		B	B	A						C	C	C	B	C		C
HNO3	20%	30	A	A	A	A	A	A	A	A	A	A	C	A		A	C	A	B	C		C	B	C	B	C	C	C		A
	▪	B.P	A	A	A	A	A	A	A	A	A	A	C	A		A	C	A		C		C		C	C	C	C	C		A
	40%	30	A	A	A	A	A	A	A	A	A	A	C	A		A	C	A	A	C		C	B	C	B	C	C	C		A
	▪	B.P	A	A	A	A	A	A	A	A	A	A	C	A		A	C	A		C		C		C	C	C	C	C		A
	75%	30	A	A	A	A	A	A	A	A	A	A	C	A		A	C	A	A	C		C	B	C	B	C	C	C		A
	▪	B.P	A	A	A	A	A	A	A	A	A	A	C	A		A	C	A		C		C		C	C	C	C	C		A
CH3CO2H	10%	30	A	A	A	A	A	A	A	A	A	A	A	A		A	A	A	A	B	A	B	A	B	A	B	B	C		A
	▪	B.P	A	A	A	A	A	A	A	A	A	A	A	A		A	B	A	A	B	A	B		B	B	B	B	C		A
	50%	30	A	A	A	A	A	A	A	A	A	A	A	A		A	B	A	A	B	A	B	A	B	A	B	B	C		A
	▪	B.P	B	A	A	A	A	A	A	A	B	A	A	A		A	B	A	A	B	A	B		B	B	C	B	C		B
	80%	30	B	A	A	A	A	A	A	A	B	A	A	A		A	B	A	A	B	A	B	A	B	A	C	B	C		B
	▪	B.P	B	A	A	A	A	A	A	A	B	A	A	A		A	B	A	A	B	A	B		B	B	C	B	C		B
H3PO4	5%	30	A	A	A	A	A	A	A	A	A	A	A	A		A	A	A	A	B	A	B	A	B	C	C	B	A		C
	▪	B.P	B	B	B	B	B	B	B	A	B	A	A	A		A	A	A	A	B	A	B		B	C	C	B	A		C
	50%	30	B	B	B	B	B	B	B	A	A	A	A	A		A	A	A	A	B	A	B	A	B	C	C	B	A		C
	▪	B.P	B	B	B	B	B	B	B	A	B	B	A	B		A	B	A	A	B	A	B		C	C	C	B	A		A
	85%	30	B	B	B	B	B	B	B	A	B	B	A	A		A	B	A	A	B	A	B	A	B	C	C	B	A		A
	▪	B.P	B	B	B	B	B	B	B	A	B	B	A	A		A	B	A	A	B	A	B		C	C	C	B	A		B
H2F2	30%	30	C	C	C	C	C	C	C	C	A		A	A		C	A			A		A	A	C	C	B	B	C		
	▪	B.P	C	C	C	C	C	C	C	C	B		C	C		C	B			C		C		C	C	C	B	C		
	70%	B.P	C	C	C	C	C	C	C	C	B		C	C		C	B			C		C		C	C	C	C	C		
HCl		30	B	B	B	B	B	B	B	B		B	A	A					A		A							A		
		200	B	B	B	B	B	B	B	B		B	A	A					A		A							A		
		400	B	B	B	B	B	B	B	B		B	A	A							A							A		
HaOH	10%	30	A	A	A	A	A	A	A	A	A	A	A	A		A	A	A	A	B	A	A	A	A	B	B	B	B		
	▪	B.P	A	A	A	A	A	A	A	A	A	A	A	A		A	A	A		B	A	A		A	B	B	B	B		
	50%	30	A	A	A	A	A	A	A	A	A	A	A	A		A	A	A	A	B	A	A	A	A	B	B	B	B		
	▪	B.P	B	B	B	B	B	B	B	A		A	A	A		A	A	A		B	A	A		A	B	B	B	B		
	70%	30	A	A	A	A	A	A	A	A	A	A	A	A		A	A	A	A	B	A	A	A	B	B	B	B	B		
	▪	B.P	B	B	B	B	B	B	B	A		A	A	A		A	A	A		B	A	A		B	B	B	B	B		
KOH	25%	B.P	A	A	A	A	A	A	A	A		A	A	A		C	A	C		C	A	B		B	C	C	B	B		
	50%	B.P	B	B	B	B	B	B	B	A		A	A	A		C	A	C		C	A	B		B	C	C	B	B		
HCl(dry)		30	C	C	C	C	C	C	A				A	A		A	A		A	A				A	A	C	B	C		
▪ (wet)		30	C	C	C	C	C	C	C	C	C		C	C		A	A		A	C				C	C	C	B	C		
HCl vapor			C	C	C	C	C	C	C	B	C								A						C	C	B	C		
HF			C	C	C	C	C	C	C	A	C						B	C	A			B	A	C	C	C	B	C		
H2(SiFe)	5%	20	C	C	C	C	C	C	C	A	C		A	A			B	C	A			C	A	C	C	C	B	C		
F	10%	30	C	C	C	C	C	C	C	A	A		A	A			B	C	A			C	A	C	C	C	B	C		
HaOH	10%	B.P	B	A	A	A	A	A	A	A	C								A					A	C	C	B	C		
	75%	100	B	A	A	A	A	A	A	A	C								A					A	C	C	B	C		
CO2	10%	200	A	A	A	A	A	A	A	A			A	A			A	A	A											
SO2			A	A	A	A	A	A	A	A				A		A	A	A	A			A		A		C		C		
Na5P3O10	10%	30	B	B	B	B	B	B	B	B	C	C	C	A			C			C	B	C	C					C		
CHCl		30	C	C	C	C	C	C	C							C					C			B	C	C		C		
A1F3	50%	30	B		B												B			A		B		A	C					
Fatty Acid		100	A	A	A	A	A	A	A	A	A		A	A		A	A	A				A		A						
NH3			A	A	A	A	A	A	A	A									A											
NaCl			A	A	A	A	A	A	A	A	A									B		A		A	C	B		B		
CrO4								A											A											
H2O2			A	A	A	A	A	A	A	A	A		A	A		A	A	A												
S(liguid)			A	A	A	A	A	A	A	A	A					A	A		A					A						
CaCl2			A	A	A	A	A	A	A	A	A		A	A		A	A		A	B		A	A	A		B		B		

Note : A=Almost no corrosion in critical conditions.B=Smail corrosion but permissible in general use other than specific parits. C=heavy corrosion and unsultable.

■ PIPE DIMENSIONS

JIS Steel Pipe Dimensions

Nominal Pipe Size		O.D	SGP	Sch No. & I.D											
				5S	10S	20S	20	30	40	60	80	100	120	140	160
A6	B1/8	10.5		8.5	8.1	7.5			7.1	6.1	5.7				
8	1/4	13.8		11.4	10.5	9.8			9.4	9.0	7.8				
10	3/8	17.3	12.7	14.9	14.0	13.3			12.7	11.7	10.9				
15	1/2	21.7	16.1	18.4	17.5	16.7			16.1	15.3	14.3				12.3
20	3/4	27.2	21.6	23.9	23.0	22.2			21.4	20.4	19.4				16.2
25	1	34.0	27.6	30.7	28.4	28.0			27.2	26.2	25.0				21.2
32	1 1/4	42.7	385.7	39.4	37.1	36.7			35.5	33.7	32.9				29.9
40	1 1/2	48.6	41.6	45.3	43.0	42.8			41.2	39.6	38.4				34.4
50	2	60.5	52.9	57.2	54.9	53.5	54.1		52.7	50.7	49.5				43.1
65	2 1/2	76.3	67.9	72.1	70.3	69.3	67.3		65.9	64.3	62.3				57.3
80	3	89.1	80.7	84.9	83.1	81.1	80.1		78.1	75.9	73.9				66.9
90	3 1/2	101.6	93.2	97.4	95.6	93.6	92.6		90.2	87.6	85.4				76.2
100	4	114.3	105.3	100.1	108.3	106.3	104.5		102.3	1001.1	97.1		92.1		87.3
125	5	139.8	130.8	134.2	133.0	129.8	129.6		126.6	123.6	120.8		114.4		108.0
150	6	165.2	155.2	159.6	158.4	155.2	154.2		151.0	146.6	143.2		136.6		128.8
175	7	190.7	180.1												
200	8	216.3	204.7	210.7	208.32	203.3	203.5	202.3	199.9	195.7	190.9	186.1	179.9	175.1	170.3
250	10	267.4	254.2	260.6	259.4	254.4	254.6	251.8	248.8	242.0	237.2	231.0	224.6	216.6	210.2
300	12	318.5	304.7	310.5	309.5	305.5	305.7	301.7	297.9	289.9	283.7	275.7	267.7	261.3	251.9
350	14	355.6	339.8				339.8	336.6	336.6	325.4	317.6	308.0	300.0	392.0	284.2
400	16	406.4	390.6				390.6	387.4	381.0	373.0	363.6	354.0	344.6	333.4	325.4
450	18	457.2	441.4				441.4	435.0	428.6	419.2	409.6	398.4	387.4	377.8	366.8
500	20	508.0	492.2				489.0	482.6	477.8	466.8	455.6	443.0	431.8	419.2	408.0

ASTM Steel Pipe Dimensions

SIZE	O.D	ANSI/ASME B36.19M-1986 Sta+inless Steel Pipe Sch.				AMSO/AS,E B36.10M-1985 Steel Pice Sch.												
		5S	10S	40S	80S	10	20	30	STD	40	XS	60	80	100	120	140	160	XXS
1/2	21.34	18.03	17.12	15.80	13.87				15.80	15.80	13.87		13.87				11.79	6.40
1/2	26.67	23.37	22.45	20.93	18.85				20.93	20.93	18.85		18.85				15.54	11.02
1	33.40	30.10	27.86	26.64	24.31				26.64	26.64	24.31		24.31				20.70	15.21
1 1/4	42.16	38.86	36.63	35.05	32.46				35.05	35.05	32.46		32.46				29.46	22.76
1 1/2	48.26	44.96	42.72	40.89	38.10				40.89	40.89	38.10		38.10				33.99	27.94
2	60.33	57.02	57.79	52.50	49.25				52.50	52.50	49.25		49.25				42.85	38.18
2 1/2	73.03	68.81	66.93	62.71	59.00				62.71	62.71	69.00		59.00				53.98	44.98
3	88.90	84.68	82.80	77.93	73.66				77.93	77.93	73.66		73.66				66.65	58.42
3 1/2	101.8	97.38	95.50	90.12	85.45				90.12	90.12	85.45		85.45					
4	114.3	110.1	108.2	102.3	97.18				102.3	102.3	97.18		97.18		92..05		67.33	80.06
5	141.3	135.8	134.5	128.2	122.3				128.2	128.2	122.3		122.3		115.9		109.6	103.2
6	168.3	162.7	161.5	154.1	146.3				154.1	154.1	146.3		146.3		139.7		131.7	124.4
8	219.1	213.5	211.6	202.7	193.7		206.4	205.0	202.7	202.7	193.7	198.5	193.7	188.9	182.5	177.8	173.1	174.6
10	273.1	266.2	264.7	254.5	247.7		260.4	257.5	254.5	254.5	247.7	247.7	242.9	236.5	230.2	222.3	215.9	222.3
12	323.9	315.9	314.7	304.8	298.5		311.2	307.1	304.8	303.2	298.5	295.3	288.9	281.0	273.1	266.7	257.2	273.1
14	355.6	347.7	346.0			342.9	339.8	336.6	336.6	333.3	330.2	325.4	317.5	307.9	300.0	292.1	284.2	
16	406.4	398.0	396.8			393.7	390.6	387.4	387.4	381.0	381.0	373.1	363.5	354.0	344.5	333.3	325.4	
18	457.2	448.8	447.6		444.5	441.4	434.9	438.2	428.7	431.8	419.1	409.5	398.5	387.4	377.89	366.7		
20	508.0	498.4	496.9		495.3	489.0	482.6	489.0	477.8	482.6	466.8	455.6	442.9	431.8	419.1	408.0		
22	558.8	549.2	547.7			546.1	539.8	533.4	539.8		533.4	514.4	501.7	489.0	476.3	463.6	450.9	
24	609.6	598.5	596.9			596.9	590.6	581.1	590.6	574.6	584.2	560.4	547.7	531.8	517.6	504.9	490.5	
26	660.4					644.6	635.0		641.4		635.0							
28	711.2					695.4	685.8	679.5	692.2		685.8							
30	762.0	749.3	746.2		746.2	738.6	730.3	743.0		736.6								

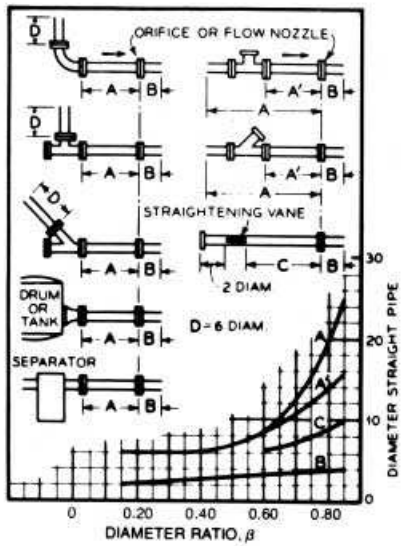

(A) FOR ORIFICES AND FLOW NOZZLES ALL FITTINGS IN SAME PLANE

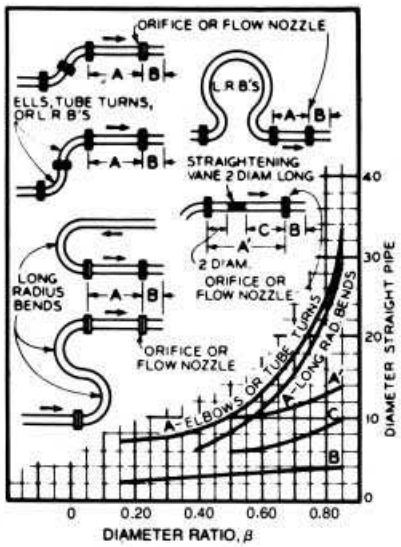

(B) FOR ORIFICES AND FLOW NOZZLES ALL FITTINGS IN SAME PLANE

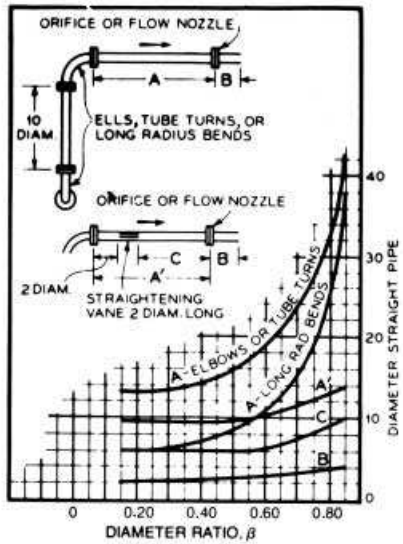

(C) FOR ORIFICES AND FLOW NOZZLES FITTINGS IN DIFFERENT PLANES

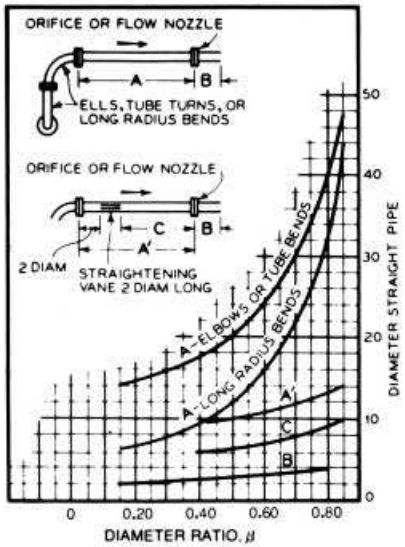

(D) FOR ORIFICES AND FLOW NOZZLES FITTINGS IN DIFFERENT PLANES

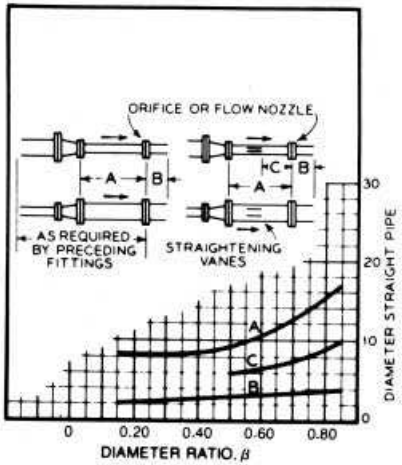

(E) FOR ORIFICES AND FLOW NOZZLES WITH REDUCERS AND EXPANDERS

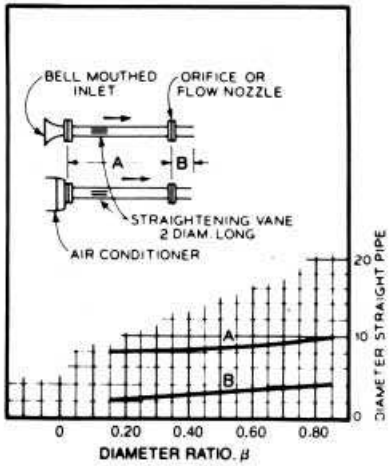

(F) FOR ORIFICES AND FLOW NOZZLES VALVES AND REGULATORS

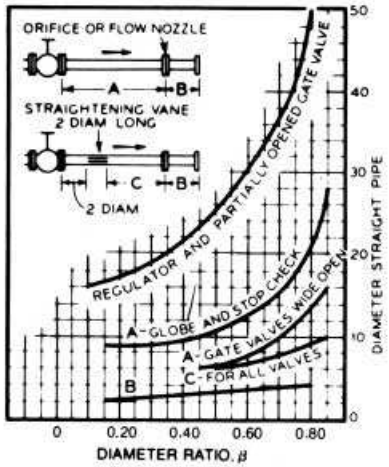

(G) IN ATMOSPHERIC IN TAKE

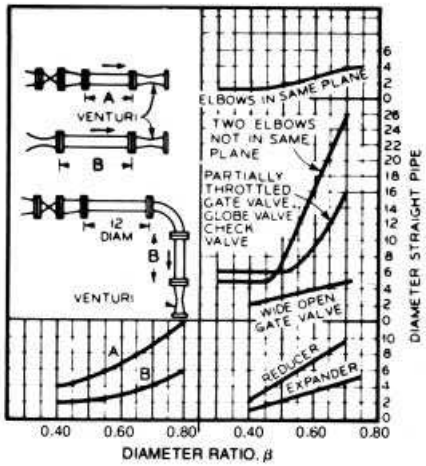

(H) FOR VENTURI TUBES

PIPING REQUIREMENTS FOR ORIFICES, FLOW NOZZLES AND VENTURI TUBES